Presentation Teasers

- **Who invented the first Prox Card?**
  - a: Charles Walton & Thomas Milheiser
  - b: Gary Carroll
  - c: Someone else
- **What security company dismissed it as a mere magicians trick?**
  - a: Wells Fargo
  - b: Securitas
  - c: ADT
- **What does this have to do with gold fish?**
  - a: The fish were used like canaries in the mines to detect hazardous substances
  - b: The fish was used in the logo of a security company
  - c: The fish were in a fish tank with an underwater reader



© 2009 Michael L. Davis, All Rights Reserved

"Wiegand's Wonderful Wires"

DEFCON 17

July 30, 2009

Michael L. Davis

mike@wiegand-effect.com



Disclaimer

- I am here as a private citizen and am not representing my employer.
- All of the material presented herein has appeared in the public domain at one time or another.
- I will answer *historical* questions about John Wiegand and the access control industry.
- I will *NOT* answer any questions (technical or otherwise) about my employer's or any other vendor's products.

©2009 Michael L. Davis, All Rights Reserved

Agenda

- Card Technology Timeline
- Old Prox Patents
- John Wiegand - Biography
- Wiegand Applications
- Wiegand Inventions
- Wiegand Hacking
- What's Next?

©2009 Michael L. Davis, All Rights Reserved

Card Technology Time Line

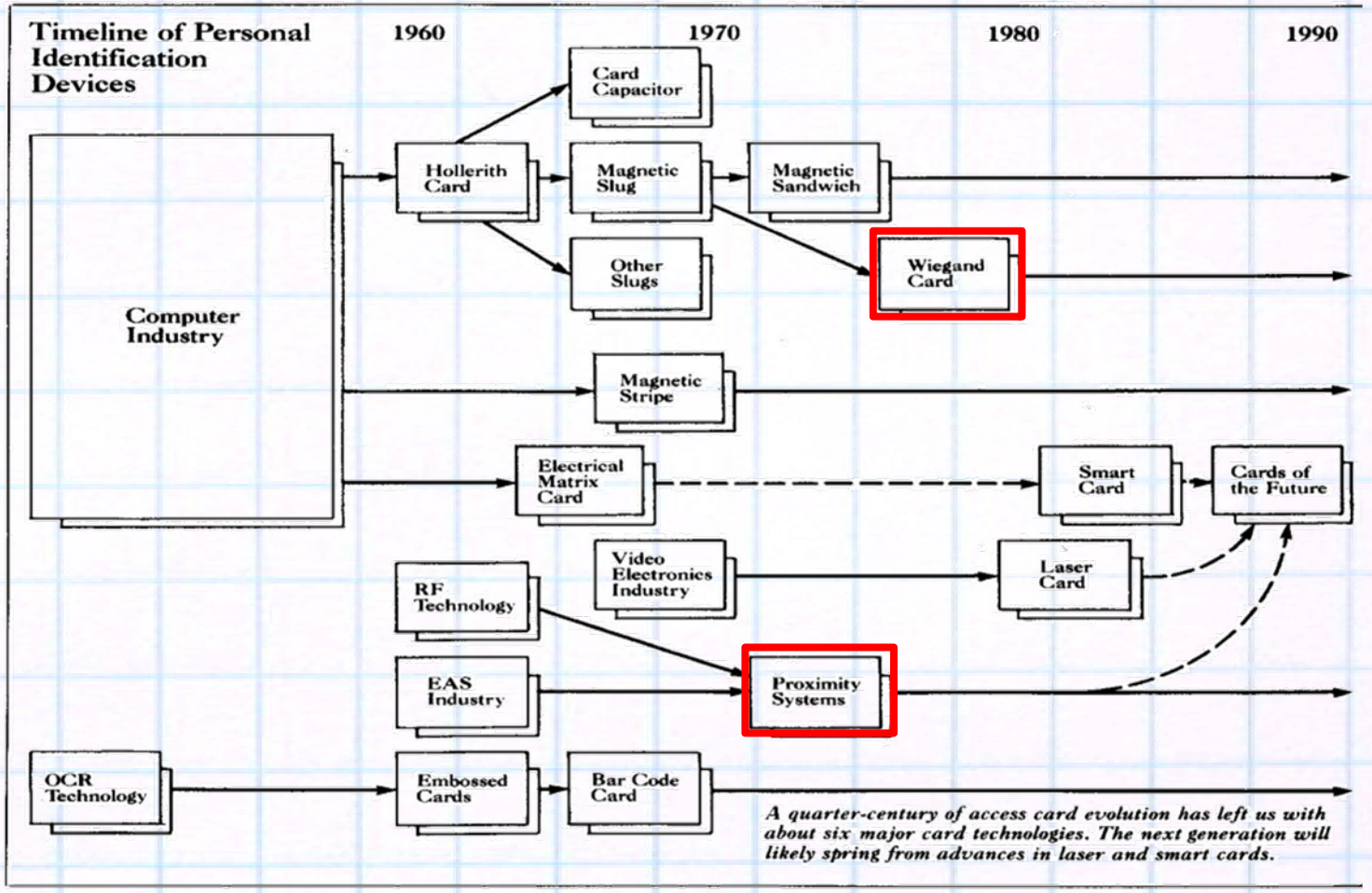

Figure 6–5 *Timeline of card access technology. (Courtesy of* Security *magazine, Des Plaines, Illinois)*

© 2009 Michael L. Davis, All Rights Reserved

The "First" RFID Tag

- Steven Shepard claims that Mario Cardullo was the inventor of the first RFID Tag*.
- After a spring of 1969 airplane ride in which he was seated next to an IBM engineer, "Cardullo sketched out the idea for the first RFID-like tag with dynamic memory."
- Patent issued Jan-23-1973.

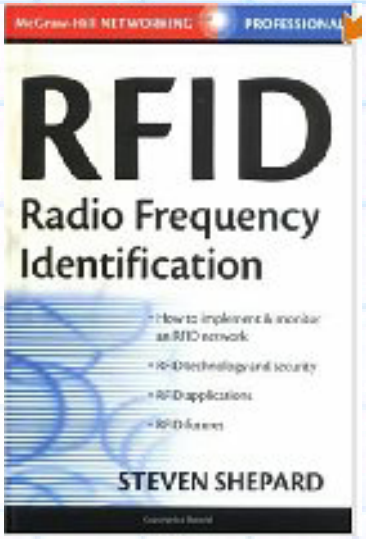

THE FIRST RFID TAG: MARIO CARDULLO

In 1969 Mario Cardullo was the corporate planning officer reporting to the chairman of satellite provider Comsat. In the spring of 1969, he found himself on a plane, seated beside an IBM engineer who was at the time involved in the implementation the optical CARTRAK system that was being developed for the railroad industry. This system was based on a reflective multicolored barcode on the side of each railroad car. As a string of

* RFID, Steven Shepard, page 49

© 2009 Michael L. Davis, All Rights Reserved

Transponder Apparatus & System

Priority Date of May-21-1970

United States Patent [19]

Cardullo et al.

[11] **3,713,148**

[45] **Jan. 23, 1973**

[54] **TRANSPONDER APPARATUS AND SYSTEM**

[75] Inventors: **Mario W. Cardullo**, Rockville; **William L. Parks, III**, Bethesda, both of Md.

[73] Assignee: **Communications Services Corporation, Inc.**, Rockville, Md.

[22] Filed: **May 21, 1970**

[21] Appl. No.: **39,309**

[52] **U.S. Cl.** ..... **343/6.5 R**, 343/6.8 R

[51] **Int. Cl.** **G01s 9/56**

[58] **Field of Search** ..... 343/6.5 R, 6.5 LC, 6.5 SS, 343/6.8 R, 6.8 LC

[56] **References Cited**

UNITED STATES PATENTS

Primary Examiner—T. H. Tubbesing
Attorney—Jacobi, Lilling & Siegel

[57] **ABSTRACT**

A novel transponder apparatus and system is disclosed, the system being of the general type wherein a base station transmits an "interrogation" signal to a remote transponder, the transponder responding with an "answerback" transmission. The transponder includes a changeable or writable memory, and means responsive to the transmitted interrogation signal for processing the signal and for selectively writing data into or reading data out from the memory. The transponder then transmits an answerback signal from the data read-out from its internal memory, which signal may be interpreted at the base station. In the preferred inventive embodiment, the transponder generates its own operating power from the transmitted interrogation signal, such that the transponder apparatus is self-contained.

© 2009 Michael L. Davis, All Rights Reserved

But Earlier RFID Patents Exist

- Actually, there were several earlier patents for RFID Interrogator/Transponder ID Systems.
  - US Patent 3,299,424 - Interrogator-Responder System has a priority date of May-05-1965.
- However, none of these earlier patents utilized digital memory; they were analog in nature.
- Note that Cardullo's first prototypes used core memory to store 16 bits of data.

© 2009 Michael L. Davis, All Rights Reserved

Interrogator-Responder System

Priority Date of May-05-1965

United States Patent Office

3,299,424

Patented Jan. 17, 1967

3,299,424

INTERROGATOR-RESPONDER IDENTIFICATION SYSTEM

Jorgen P. Vinding, 18780 Withey Road, Monte Sereno, Calif. 95030

Filed May 7, 1965, Ser. No. 453,939

21 Claims. (Cl. 343—6.5)

This invention relates to an identification system for recognizing an object as a member of a class or as a particular member within that class, or both. More particularly, this invention relates to an interrogator-responder identification system in which an interrogator interrogates the object to be recognized when in inductive coupling proximity thereto and in which the responder responds to such interrogation in a manner by which the interrogator can recognize the object either as a member of a class or as a particular member within that class.

Interrogator-responder identification systems known heretofore are characterized in that the interrogation and the response are in the form of radio signals, i.e., they communicate by transmitting and receiving high frequency energy. In such systems the interrogator is provided with an antenna element for radiating the interrogator signal and for receiving the responder signal, and the

fere with the operation of other devices, such as communication or control equipment. For example, it is well known that many communications and instruments are affected by "spurious" radio signals in their vicinity. Furthermore, the generation of radio-frequency waves is often subject to government restrictions and control which might make an optimum carrier frequency signal unavailable to the user of the identification system, particularly since many portions of the radio-frequency spectrum are already severely overcrowded.

Finally, one further limitation of the above-mentioned radio-frequency identification system is the requirement that both the interrogator and the responder include a radiative element for efficiently radiating at the carrier frequency. This requirement is usually met by making the equivalent physical length of the antenna element equal to one or more one-quarter wavelengths of the mean carrier wavelength. Accordingly, for an efficient radiator element for a VHF carrier frequency of 250 megacycles per second, the equivalent physical size of the element must be about 1 foot. These considerations require the use of very high frequencies, which are often not commensurate with other requirements.

It is, therefore, a primary object of this invention to provide a new and novel object identification system.

© 2009 Michael L. Davis, All Rights Reserved

Introducing the Musician with Perfect Pitch - John R. Wiegand

- Although he might very well have been a world famous symphony conductor, history remembers him as the man who invented and perfected the "Wiegand-Effect".
- But, until now, nobody realized that he also invented a digital read/write Prox RFID system before anyone else.
- As Paul Harvey would say, "Now, the rest of the story."

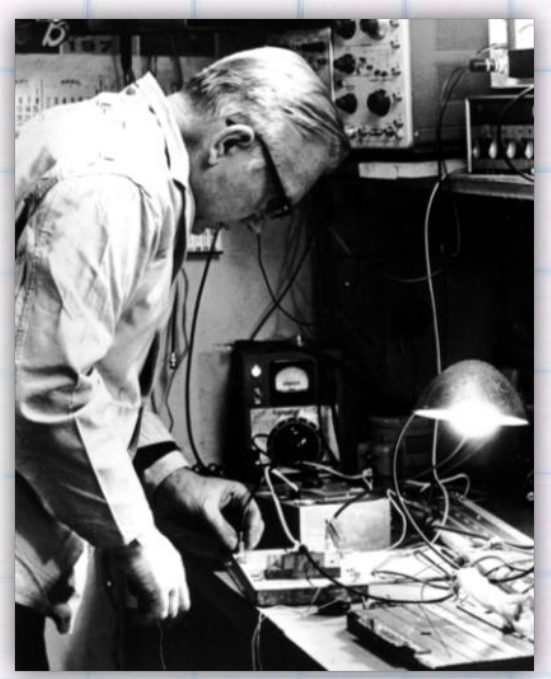

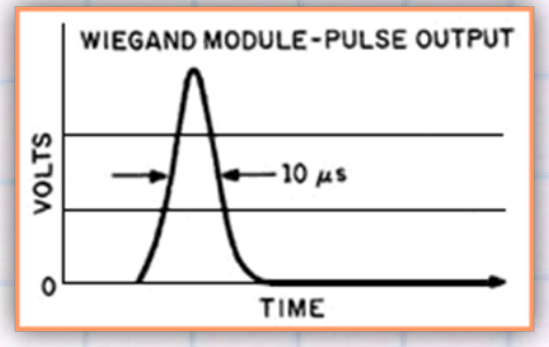

© 2009 Michael L. Davis, All Rights Reserved

Interceptor Xmfr Prox Key

Priority Date of Dec-17-1965

United States Patent Office

3,448,440
Patented June 3, 1969

1

3,448,440
INTERCEPTOR TRANSFORMER PROXIMITY KEY
John R. Wiegand, Valley Stream, N.Y., assignor to Wiegand Electronics Co., Inc., Union County, N.J., a corporation of New Jersey
Filed Dec. 17, 1965, Ser. No. 514,555
Int. Cl. G11b *5/00, 5/20*
U.S. Cl. 340—174 10 Claims

According to the invention, a proximity key embodying the invention may be in the form of a flat card on which is a thin interceptor transformer. The interceptor transformer will be in general similar in character to one of those described in my prior Patent 3,137,842 and in my copending patent application 356,724 filed Apr. 2, 1964, now Patent No. 3,223,987. The interceptor transformer comprises a flat spiral coil made of copper wire. Around the wire are two helices of enameled magnetic wire uniformly wound in opposite directions for the entire length of the spiral coil. A capacitor is connected across the ends of the spiral coil. The device is intended for use with a transmitting station which emits binary coded damped pulse trains of magnetic waves. The pulse trains reaching the proximity key will be memorized or stored therein, and will be reradiated as magnetic pulses from

2

magnetic waves from a nearby radiant energy source interrogate the proximity key and supply the energy required for reradiation by the proximity key of predetermined coded answers.

It is therefore a principal object of the invention to provide a magnetic proximity key device employing a tuned resonant circuit including an interceptor transformer and capacitor connected across the transformer.

A further object is to provide a proximity key device employing a plurality of interceptors transformers electrically interconnected with an amplifier, one of the transformers being part of a tuned circuit.

Another object is to provide a magnetic signal system including a transceiver station for emitting coded magnetic waves, and one or more proximity keys each comprising a resonant circuit including an interceptor transformer responsive to coded waves received at a point spaced from the transceiver for reradiating coded pulses corresponding to the received coded waves, to actuate a receiving circuit at the transceiver.

For further comprehension of the invention, and of the objects and advantages thereof, reference will be had to the following description and accompanying drawings and to the appended claims in which the various novel features of the invention are more particularly set forth.

© 2009 Michael L. Davis, All Rights Reserved

Uses Described in Patent Background – Sound Familiar?

The invention can be used for proximity key cards which can be carried by a person in a pocket or handbag. When the person carrying the card approaches a locked door having an associated transmitter emitting coded magnetic waves, the door will be automatically opened by an electronically controlled door opener triggered by waves reradiated from the proximity key card carried by the approaching person.

The invention can be used in a bank, defense manufacturing plant or other installation where various persons have authorized access to only certain parts of the installation. A person carrying a particularly proximity key which may be part of an identification badge will find that as he approaches locked doors and gates, only those doors and gates will open to him to which he has authorized access, and all other doors and gates will remain closed.

The invention can be used by tenants of a building, each of whom carries a proximity key corresponding to coding of a door to the building. As a tenant carrying a proximity key arrives at or approaches the door the door will automatically open.

The invention can be used for opening garage doors automatically.

© 2009 Michael L. Davis, All Rights Reserved

Interceptor Xmfr Proximity Key Patent Drawings

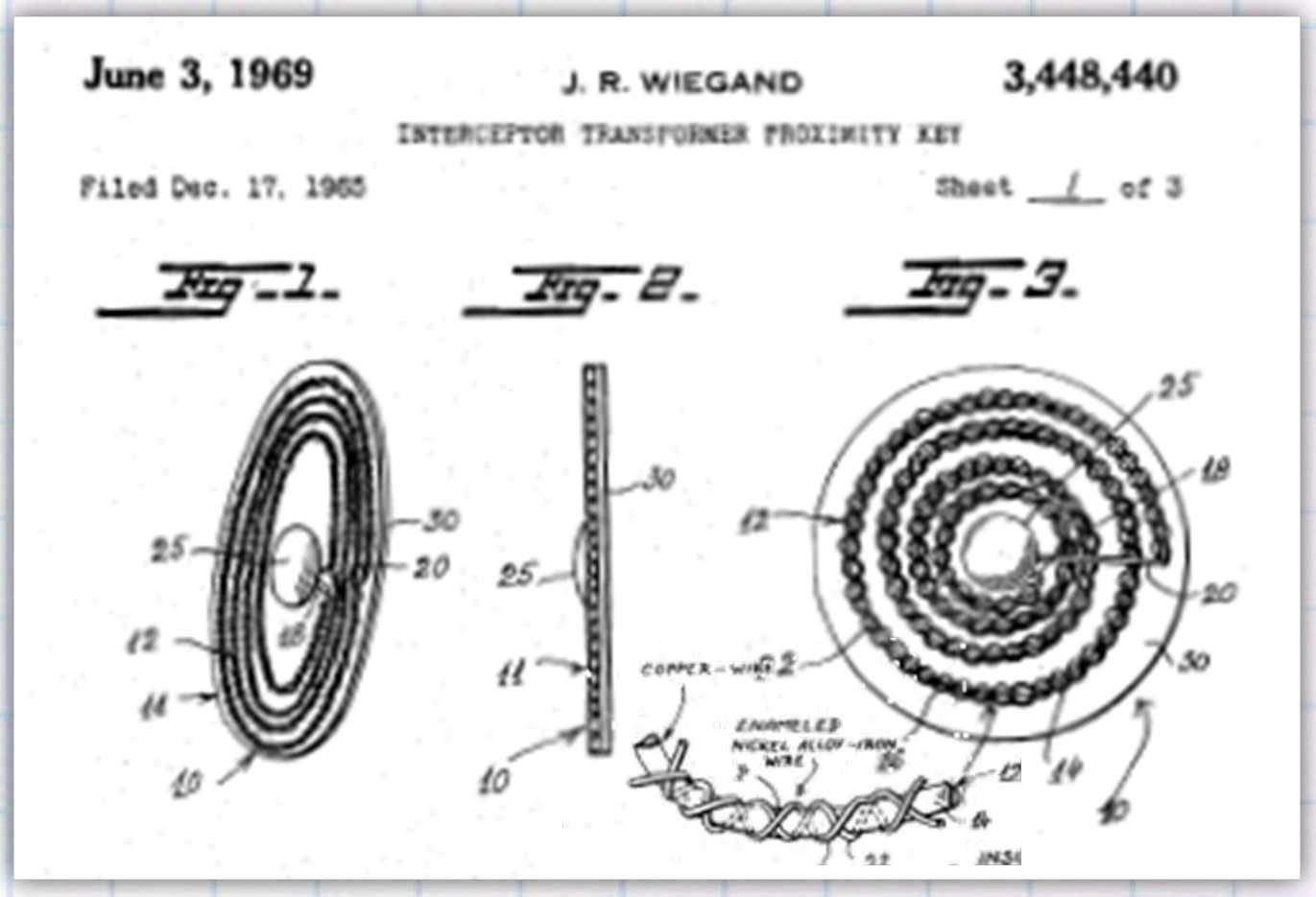

June 3, 1969 J. R. WIEGAND 3,448,440

INTERCEPTOR TRANSFORMER PROXIMITY KEY

Filed Dec. 17, 1965 Sheet 1 of 3

Fig. 1. Fig. 2. Fig. 3.

© 2009 Michael L. Davis, All Rights Reserved

Interceptor Xmfr Proximity Key Patent Drawings (cont.)

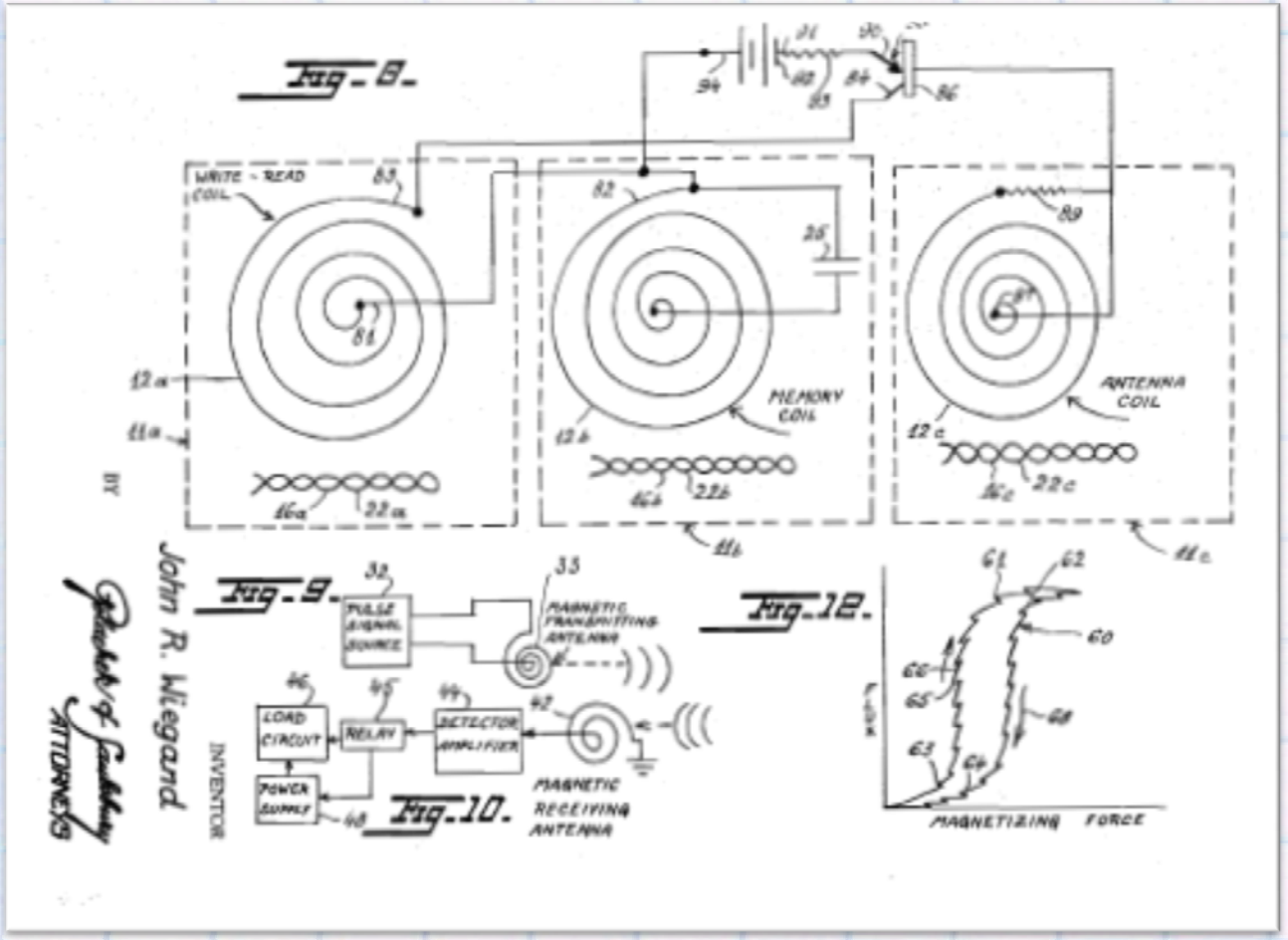

© 2009 Michael L. Davis, All Rights Reserved

Interceptor Xmfr Proximity Key Patent Drawings (cont.)

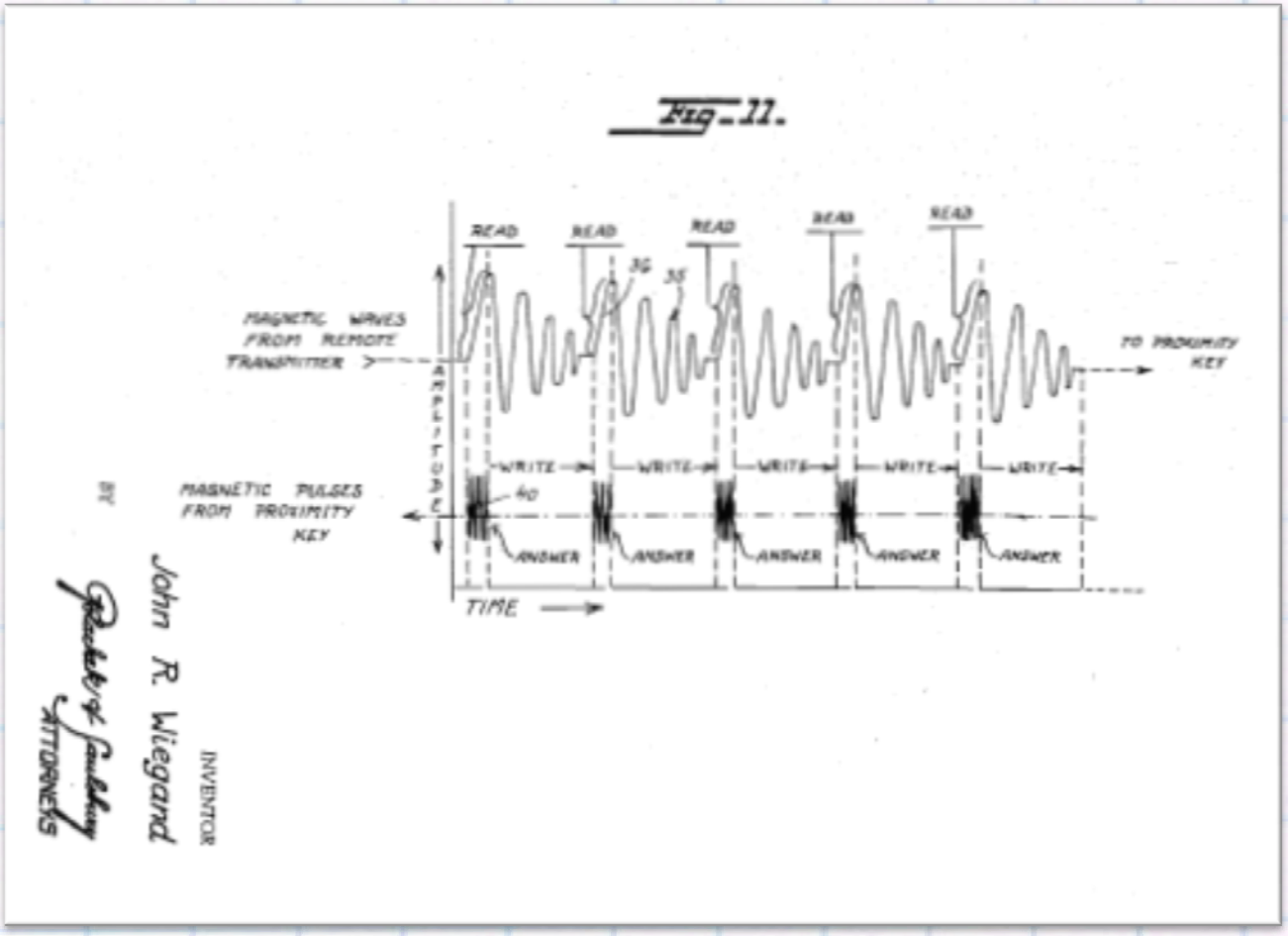

© 2009 Michael L. Davis, All Rights Reserved

Quote

- "Any sufficiently advanced technology is indistinguishable from magic."
  - Arthur C. Clarke, "Profiles of The Future", 1961

- Keep this in mind when you see the next slide.

© 2009 Michael L. Davis, All Rights Reserved

ADT Declined

- Milton Velinsky, John's Business partner, told me that he demo'ed John's Prox invention to ADT and they dismissed it as a magicians trick and doubted its viability.
- John's Prox invention was never commercialized yet it was far ahead of its time.
  - It used the same principle as today's Prox – near field communications at 4.8 kHz.
  - Data was stored on the wire sort-of-like bubble memory.
  - It was passive and drew power from the interrogator.
    - But it could use a battery for longer communications.

© 2009 Michael L. Davis, All Rights Reserved

JOHN WIEGAND BIOGRAPHY

© 2009 Michael L. Davis, All Rights Reserved

Who Was John Wiegand?

- John was neither an engineer nor a physicist but was a musician by training.
- Born in Germany in 1912, John Wiegand came to the US in the 1930's and studied piano and choral conducting at the Julliard School of Music in NY.
- While attending Julliard, he became interested in audio amplifiers and later became an engineering assistant for magnetic amplifiers at the Bell Telephone Laboratory.
- In 1944, he began working for Sperry Gyroscope Company in Lake Success, N.Y., and later for a Government contractor as a product developer of tape recorders.

(c) 2009 Michael L. Davis, All Rights Reserved

Who Was John Wiegand? (cont.)

- In 1965, he started his relentless pursuit of magnetic research that led to the development and patenting of the Wiegand effect.
- Before he had an oscilloscope to *see* pulses, it was his perfect pitch that enabled him to *listen* to the magnetic pulse produced by his wire through a loudspeaker.
- John always referred to the wires as "she" and said that the wires sung to him.
- John later met Milton Velinsky and together they formed Wiegand Electronics to develop product applications for the Wiegand Effect.
- John did the inventing and Milt did the promoting and selling.

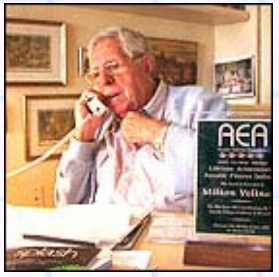

(c) 2009 Michael L. Davis, All Rights Reserved

SOME OF JOHN'S INVENTIONS

© 2009 Michael L. Davis, All Rights Reserved

PARTIAL LIST OF APPLICATIONS*

- INDUSTRIAL CONTROLS
  - Intrinsically safe limit switch
  - Flowmeter
  - Position sensor
  - Rotary pulser
  - Linear pulser
  - Reference sensor
  - Coded process control
  - Coded conveyor
  - Rate sensor
  - Motion sensor
  - Time delay
  - Servo controls

* From Sensor Engineering "Wiegand Effect Design Guide"

- AUTOMOTIVE
  - Ignition systems
  - Anti-skid sensor
  - Fuel injection controls
  - Fuel mileage computer
  - Transmission controls
  - Speedometer
  - Tachometer
  - Turn signals
  - Level control
  - Crank position sensor
- Meters
  - Intrinsically safe gas meter
  - Electric meter
  - Water meter

© 2009 Michael L. Davis, All Rights Reserved

PARTIAL LIST OF APPLICATIONS (cont.)

- CARD AND KEY SYSTEMS
  - Transaction cards
  - Credit cards
  - Gasoline cards
  - Check verification
  - Process controls
  - Security access control
  - Personal ID cards
  - Time cards
  - Mass transit fare cards
  - Parking lot gate cards
  - Badge readers
  - Cable TV
- ALARM SYSTEMS
  - Batteryless alarms
  - Wireless alarms
  - Wired systems
  - Explosion proof sensor
- Switches
  - Intrinsically safe switch
  - Contactless switch
  - Coded push button switch
  - Keyboards
  - Discrete keys
  - Limit switches
  - Proximity switches

© 2009 Michael L. Davis, All Rights Reserved

US 4,187,981 - Coded module for use in a magnetic pulse generator & method of mfr.

Priority Date of Jan-26-1970

United States Patent [19]

Sinko et al.

[11] **4,187,981**

[45] **Feb. 12, 1980**

[54] **CODED MODULE FOR USE IN A MAGNETIC PULSE GENERATOR AND METHOD OF MANUFACTURE**

[75] Inventors: **Michael J. Sinko**, Guilford, Conn.; **Milton Velinsky**, Atlantic Highlands, N.J.

[73] Assignee: **The Echlin Manufacturing Company**, Branford, Conn.

[21] Appl. No.: **965,023**

[22] Filed: **Nov. 30, 1978**

[51] Int. Cl.² **G06K 19/04**; G06K 7/08; G11C 11/02

[52] U.S. Cl. **235/488**; 235/449;

[56] **References Cited**

U.S. PATENT DOCUMENTS

3,783,249	1/1974	Wiegand	23
3,808,404	4/1974	Riggs	23
3,859,508	1/1975	Benson et al.	23

Primary Examiner—Daryl W. Cook
Attorney, Agent, or Firm—McAulay, Fields, Fisher, Goldstein

[57] **ABSTRACT**

A coded, magnetic module has a plurality of Wi effect exhibiting wires deployed parallel to one an and extending substantially across the module. T wires are supported in a laminated arrangemen tween two thin plastic support plies. Coding is impressed on the module by punching out an intermediate portion of each wire including the adjacent zone of the support plies. This produces a relatively physically stable coded module for subsequent use as part of a coded magnetic pulse generator.

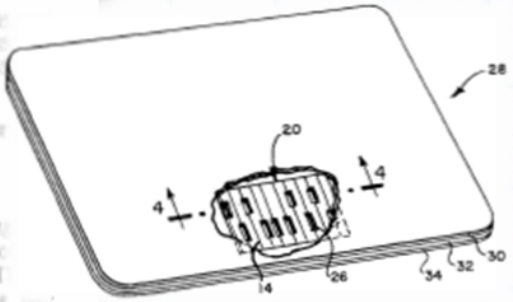

Accordingly, the use of the magnetic stripe encoded device on such documents as a passport, identification papers or an identification card is generally unacceptable because of the ease with which the code can be changed.

© 2009 Michael L. Davis, All Rights Reserved

Wiegand Card Reader
(Priority date of Jan-26-1970)

United States Patent [19]

Wiegand

[11] **3,783,249**

[45] **Jan. 1, 1974**

[54] **CODED MAGNETIC CARD AND READER**

[75] Inventor: **John Richard Wiegand**, Valley Stream, N.Y.

[73] Assignees: **Milton Velinsky**, Plainfield, N.J.; **John R. Wiegand**, Valley Stream, N.Y. ; part interest to each

[22] Filed: **Oct. 13, 1971**

[21] Appl. No.: **189,027**

Related U.S. Application Data

[63] Continuation-in-part of Ser. No. 5,632, Jan. 26, 1970, abandoned.

[52] **U.S. Cl.**.....**235/61.11 D**, 235/61.12 M, 340/174.1 H

[51] **Int. Cl.**.....**G06k 7/08**, G11b 5/00

[58] **Field of Search**.....235/61.11 R, 61.11 D, 235/61.12 R, 61.12 M, 61.12 N, 61.7 B; 340/174.1 G, 174.1 H, 149 A

[56] **References Cited**

UNITED STATES PATENTS

3,215,903	11/1965	Barney	235/61.11 D
3,419,710	12/1968	Mathews, Jr. et al.	235/61.11 D
3,453,598	7/1969	Schweizer	340/149

Primary Examiner—Daryl W. Cook

Attorney—Laurence R. Hefter et al.

[57] **ABSTRACT**

A coded pulse generation system includes a coded card and card reader. The card has a plurality of axially straight helically twisted magnetic wires disposed parallel to each other transversely of the card. Some of the wires may have polarities reversed from the remaining wires and may be disposed between two opaque layers. The card reader has a fixture including two spaced walls defining a slot into which the card is inserted. Permanent magnets and magnetic cores wound with wire coils are mounted on the walls of the fixture. While the card is being inserted into the slot, sequentially the magnetic state of each wire changes instantaneously generating a pulse in the coils.

14 Claims, 10 Drawing Figures

(c) 2009 Michael L. Davis, All Rights Reserved

Wiegand Card Reader
(Drawings)

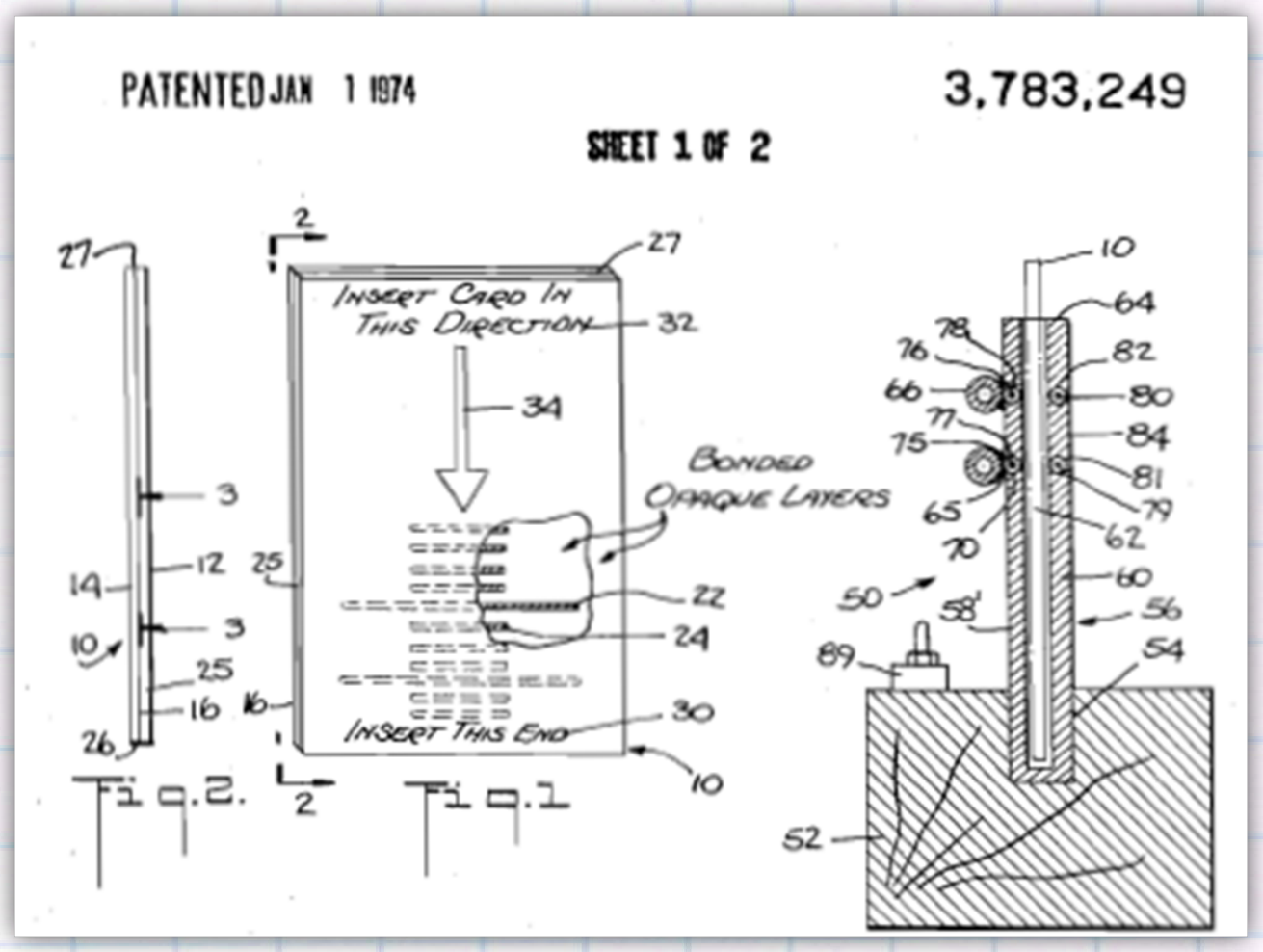

(c) 2009 Michael L. Davis, All Rights Reserved

Wiegand Card Reader
(Working Model)

- This working unit was actually used by Milt Velinsky on sales calls to the NYC Transit Authority and others.
- It was a "drop through" reader.
- Note the trademark on the card of SNMW which stands for Self Nucleating Magnetic Wire.



(c) 2009 Michael L. Davis, All Rights Reserved

OTHER PATENTS USING THE WIEGAND EFFECT

© 2009 Michael L. Davis, All Rights Reserved

US 5,908,103 - Wiegand Token

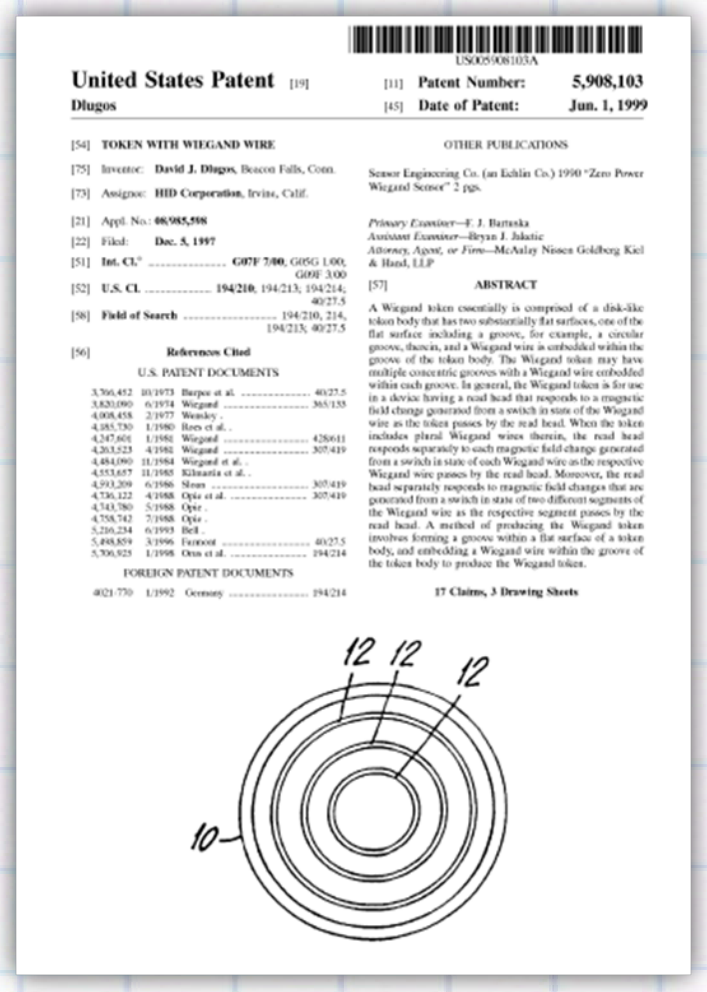

US005908103A

United States Patent [19]
Dlugos

[11] **Patent Number: 5,908,103**
[45] **Date of Patent: Jun. 1, 1999**

[54] **TOKEN WITH WIEGAND WIRE**

[75] Inventor: **David J. Dlugos**, Beacon Falls, Conn.

[73] Assignee: **HID Corporation**, Irvine, Calif.

[21] Appl. No.: **08/985,598**

[22] Filed: **Dec. 5, 1997**

[51] **Int. Cl.**[6] **G07F 7/00**; G05G 1.00; G09F 3.00

[52] **U.S. Cl.** **194/210**; 194/213; 194/214; 40/27.5

[58] **Field of Search** 194/210, 214, 194/213; 40/27.5

[56] **References Cited**

U.S. PATENT DOCUMENTS

3,396,452	10/1973	Burpee et al.	40/27.5
3,820,090	6/1974	Wiegand	365/155
4,008,458	2/1977	Wemley .	
4,385,730	1/1980	Rees et al. .	
4,247,601	1/1981	Wiegand	428/611
4,263,525	4/1981	Wiegand	307/419
4,484,090	11/1984	Wiegand et al. .	
4,553,657	11/1985	Kihnarila et al. .	
4,593,209	6/1986	Sloan	307/419
4,736,122	4/1988	Opie et al.	307/419
4,743,780	5/1988	Opie .	
4,758,742	7/1988	Opie .	
5,210,234	6/1993	Bell .	
5,498,859	3/1996	Fremont	40/27.5
5,706,925	1/1998	Otto et al.	194/214

FOREIGN PATENT DOCUMENTS

4021770	1/1992	Germany	194/214

OTHER PUBLICATIONS

Sensor Engineering Co. (an Echlin Co.) 1990 "Zero Power Wiegand Sensor" 2 pgs.

Primary Examiner—F. J. Bartuska
Assistant Examiner—Bryan J. Jukatic
Attorney, Agent, or Firm—McAuley Nissen Goldberg Kiel & Hand, LLP

[57] **ABSTRACT**

A Wiegand token essentially is comprised of a disk-like token body that has two substantially flat surfaces, one of the flat surface including a groove, for example, a circular groove, therein, and a Wiegand wire is embedded within the groove of the token body. The Wiegand token may have multiple concentric grooves with a Wiegand wire embedded within each groove. In general, the Wiegand token is for use in a device having a read head that responds to a magnetic field change generated from a switch in state of the Wiegand wire as the token passes by the read head. When the token includes plural Wiegand wires therein, the read head responds separately to each magnetic field change generated from a switch in state of each Wiegand wire as the respective Wiegand wire passes by the read head. Moreover, the read head separately responds to magnetic field changes that are generated from a switch in state of two different segments of the Wiegand wire as the respective segment passes by the read head. A method of producing the Wiegand token involves forming a groove within a flat surface of a token body, and embedding a Wiegand wire within the groove of the token body to produce the Wiegand token.

17 Claims, 3 Drawing Sheets



© 2009 Michael L. Davis, All Rights Reserved

US 5,632,169 - Self Powered Electronic Combination Lock

US005632169A

United States Patent [19]

Clark et al.

[11] **Patent Number: 5,632,169**

[45] **Date of Patent: May 27, 1997**

[54] **SELF POWERED ELECTRONIC COMBINATION LOCK HAVING COMPREHENSIVE MONITORING OF POWER LEVELS FOR VARIOUS FUNCTIONS**

[75] Inventors: **Michael R. Clark**, Lexington, Ky.; **Christian F. Mascaro**, Bowie, Md.

[73] Assignee: **Sargent & Greenleaf**, Nicholasville, Ky.

[21] Appl. No.: **470,272**

[22] Filed: **Jun. 6, 1995**

Related U.S. Application Data

4,631,940	12/1986	Krivec et al. .	
4,684,945	8/1987	Sanderford, Jr. .	
4,745,784	5/1988	Gartner	70/303 A X
4,831,851	5/1989	Larson .	
4,855,862	8/1989	Wainio et al.	361/72
4,904,984	2/1990	Gartner et al.	70/333 R X

(List continued on next page.)

FOREIGN PATENT DOCUMENTS

0 021 670 A1	1/1981	European Pat. Off. .
2 533 340	9/1982	France .
3208818	3/1982	Germany .
2 175 638	3/1986	United Kingdom .
WO80/02710	12/1980	WIPO .

Primary Examiner—Suzanne L. Dino
Attorney, Agent, or Firm—Reid & Priest

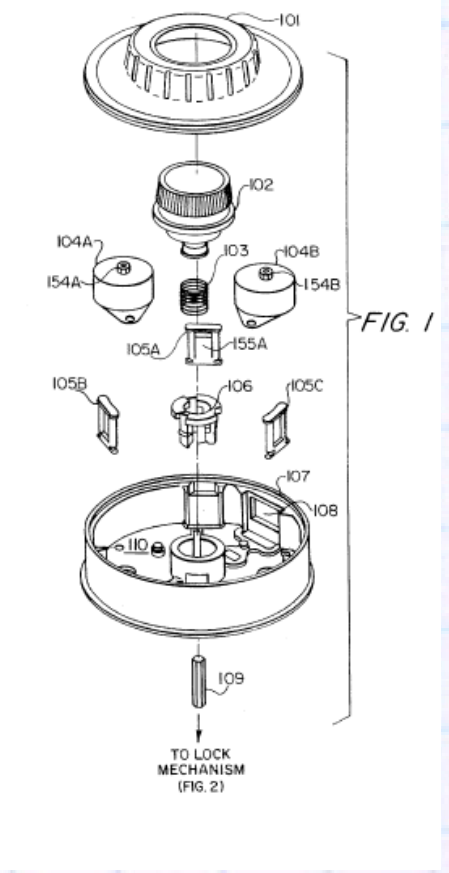

FIG. 1

©2009 Michael L. Davis, All Rights Reserved

US 5,640,862 - Electronic combination lock including a sensor which senses position and direction of movement of the combination dial

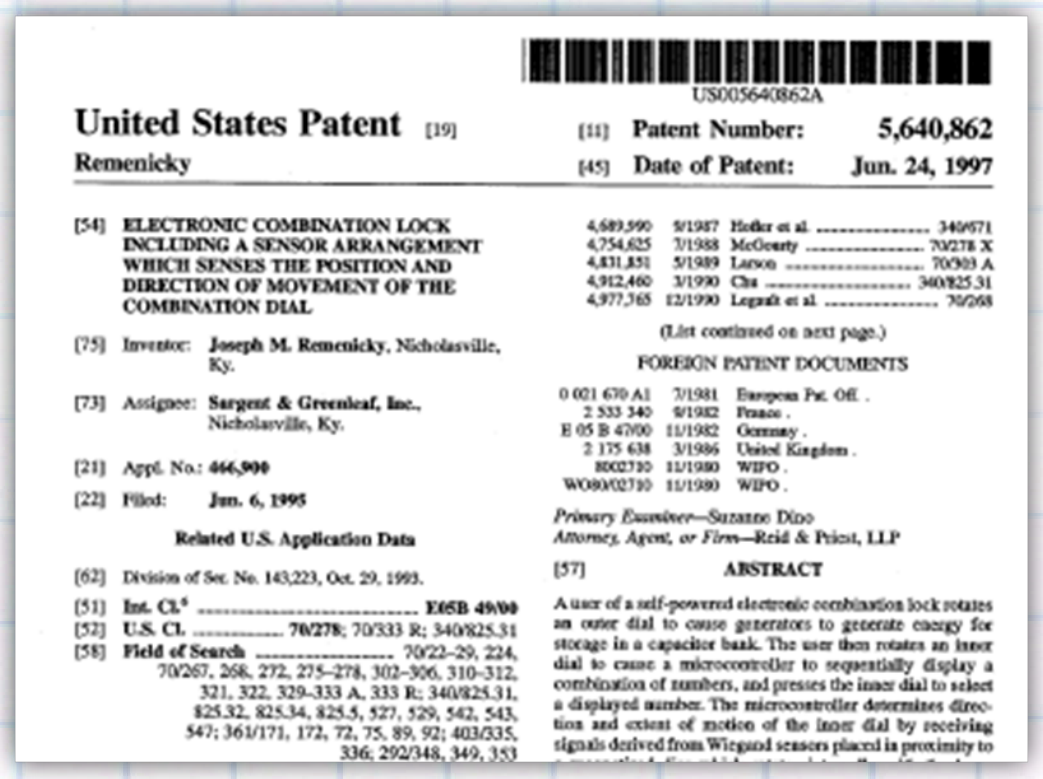

US005640862A

United States Patent [19]

Remenicky

[11] **Patent Number: 5,640,862**

[45] **Date of Patent: Jun. 24, 1997**

[54] **ELECTRONIC COMBINATION LOCK INCLUDING A SENSOR ARRANGEMENT WHICH SENSES THE POSITION AND DIRECTION OF MOVEMENT OF THE COMBINATION DIAL**

[75] Inventor: **Joseph M. Remenicky**, Nicholasville, Ky.

[73] Assignee: **Sargent & Greenleaf, Inc.**, Nicholasville, Ky.

[21] Appl. No.: **466,900**

[22] Filed: **Jun. 6, 1995**

Related U.S. Application Data

[62] Division of Ser. No. 143,223, Oct. 29, 1993.

[51] **Int. Cl.**[6] **E05B 49/00**

[52] **U.S. Cl.** ..... **70/278**; 70/333 R; 340/825.31

[58] **Field of Search** ..... 70/22–29, 224, 70/267, 268, 272, 275–278, 302–306, 310–312, 321, 322, 329–333 A, 333 R; 340/825.31, 825.32, 825.34, 825.5, 527, 529, 542, 543, 547; 361/171, 172, 72, 75, 89, 92; 403/335, 336; 292/348, 349, 353

4,689,590	9/1987	Hofer et al.	340/671
4,754,625	7/1988	McGourty	70/278 X
4,831,851	5/1989	Larson	70/303 A
4,912,460	3/1990	Chu	340/825.31
4,977,765	12/1990	Legault et al.	70/268

(List continued on next page.)

FOREIGN PATENT DOCUMENTS

0 021 670 A1	7/1981	European Pat. Off. .
2 533 340	9/1982	France .
E 05 B 47/00	11/1982	Germany .
2 175 638	3/1986	United Kingdom .
8002730	11/1980	WIPO .
WO80/02730	11/1980	WIPO .

Primary Examiner—Suzanne Dino
Attorney, Agent, or Firm—Reid & Priest, LLP

[57] **ABSTRACT**

A user of a self-powered electronic combination lock rotates an outer dial to cause generators to generate energy for storage in a capacitor bank. The user then rotates an inner dial to cause a microcontroller to sequentially display a combination of numbers, and presses the inner dial to select a displayed number. The microcontroller determines direction and extent of motion of the inner dial by receiving signals derived from Wiegand sensors placed in proximity to

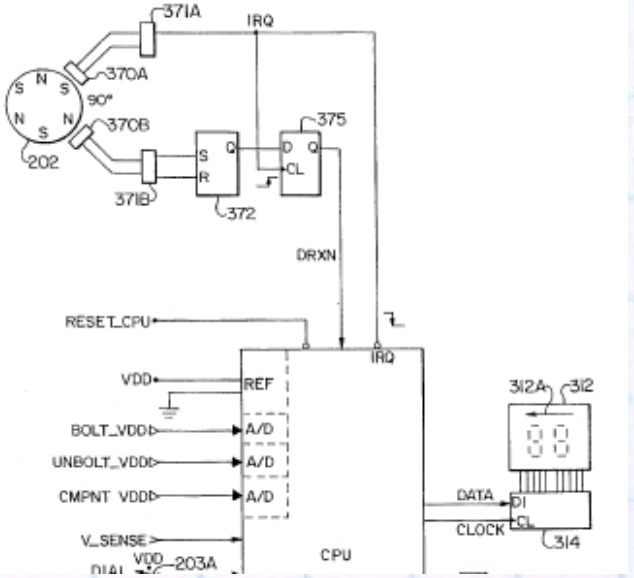

©2009 Michael L. Davis, All Rights Reserved

US 4,242,789 - Method for making an improved magnetic encoding device

United States Patent [19]

Fox

[11] **4,242,789**

[45] **Jan. 6, 1981**

[54] **METHOD FOR MAKING AN IMPROVED MAGNETIC ENCODING DEVICE**

[75] Inventor: **Richard J. Fox**, Oak Ridge, Tenn.

[73] Assignee: **The United States of America as represented by the United States Department of Energy**, Washington, D.C.

[21] Appl. No.: **21,291**

[22] Filed: **Mar. 16, 1979**

[51] **Int. Cl.**[3] **B23D 11/02**

[52] **U.S. Cl.** **29/446**; 29/469.5; 235/493; 365/133; 360/2

[58] **Field of Search** 29/446, 469.5; 235/493; 365/133, 135; 360/2

OTHER PUBLICATIONS

K. J. Sixtus et al., Physical Review, Apr. 1931, vol. 3, pp. 930–958.

Stress and Magnetostriction, Richard M. Bozorth, printed 3/1951–6th Reprint, pp. 610–611.

Primary Examiner—Charlie T. Moon

Attorney, Agent, or Firm—James E. Denny; Stephen D. Hamel; David E. Breeden

[57] **ABSTRACT**

A magnetic encoding device and method for making the same are provided for use as magnetic storage mediums in identification control applications which give output signals from a reader that are of shorter duration and substantially greater magnitude than those of the prior art. Magnetic encoding elements are produced by uniformly bending wire or strip stock of a magnetic material longitudinally about a common radius to ex-

© 2009 Michael L. Davis, All Rights Reserved

US 4,326,124 - Locking apparatus for preventing unauthorized access or actions

United States Patent [19]

Faude

[11] **4,326,124**

[45] **Apr. 20, 1982**

[54] **LOCKING APPARATUS FOR PREVENTING UNAUTHORIZED ACCESS OR ACTIONS**

[75] Inventor: **Rude Faude**, Balingen, Fed. Rep. of Germany

[73] Assignee: **BSG Schalttechnik GmbH & Co. KG.**, Balingen, Fed. Rep. of Germany

[21] Appl. No.: **134,825**

[22] Filed: **Mar. 28, 1980**

Related U.S. Application Data

[63] Continuation-in-part of Ser. No. 963,054, Nov. 21, 1978.

[30] **Foreign Application Priority Data**

Mar. 28, 1979 [DE] Fed. Rep. of Germany 2912258

[51] **Int. Cl.**³ **G06K 7/08**

[52] **U.S. Cl.** **235/382;** 235/449; 340/825.31

[58] **Field of Search** ..... 235/382, 449, 493, 499; 365/133; 340/149 A

[56] **References Cited**

U.S. PATENT DOCUMENTS

3,626,160	12/1971	Hagopian	235/449
3,774,179	11/1973	Wiegand	365/133
3,820,090	6/1974	Wiegand	365/133
3,953,712	4/1976	Horvath	235/449

Primary Examiner—Harold I. Pitts

Attorney, Agent, or Firm—Edwin E. Greigg

[57] **ABSTRACT**

Apparatus for actuating a security system which includes an actuator element, such as a key, in which is embedded a plurality of "Wiegand effect" magnetic rods forming at least one track of magnetically coded information. When the actuator element is inserted into a complementary element, a conditioning permanent magnet of a given polarity at the entrance of the complementary element switches each magnetic rod into a first magnetic state, then a drive permanent magnet of an opposite polarity disposed inwardly of the conditioning magnet switches each magnetic rod into a second magnetic state as the magnetic rod moves past it, causing a sharp voltage pulse to be generated within a sensor coil disposed close to the drive magnet and the magnetic rod being switched. The information carried by the actuator element is transmitted as a series of voltage pulses generated by one or more sensor coils to known signal processing circuits, which actuates the security system to permit an authorized action if this information is the same as information stored in a memory of the signal processing circuits.

4 Claims, 6 Drawing Figures

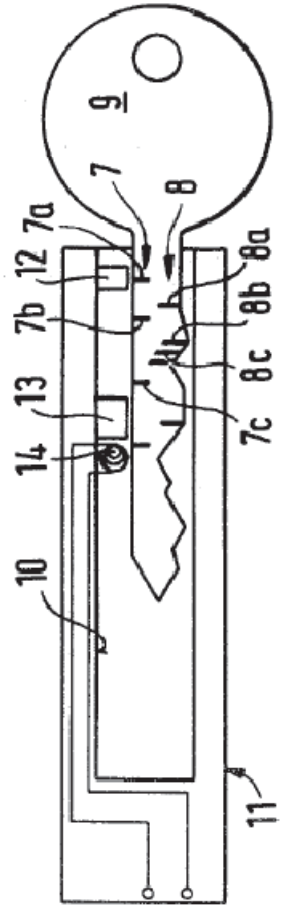

©2009 Michael L. Davis, All Rights Reserved

US 5,831,532 - Identification tags using amorphous wire [IBM]

US005831532A

United States Patent [19]

Gambino et al.

[11] **Patent Number: 5,831,532**

[45] **Date of Patent: Nov. 3, 1998**

[54] **IDENTIFICATION TAGS USING AMORPHOUS WIRE**

[75] Inventors: **Richard Joseph Gambino**, Stony Brook; **Alejandro Gabriel Schrott**; **Robert Jacob von Gutfeld**, both of New York, all of N.Y.

[73] Assignee: **International Business Machines Corporation**, Armonk, N.Y.

[21] Appl. No.: **909,719**

[22] Filed: **Aug. 12, 1997**

Related U.S. Application Data

[62] Division of Ser. No. 496,838, Jun. 29, 1995, Pat. No. 5,729,201.

[51] **Int. Cl.**[6] **G08B 13/14**

[52] **U.S. Cl.** **340/572**; 235/493

[58] **Field of Search** 340/572, 551, 340/825.34; 235/493

[56] **References Cited**

U.S. PATENT DOCUMENTS

Re. 32,427	5/1987	Gregor et al.	340/572
4,568,921	2/1986	Pokalsky	340/572
4,660,025	4/1987	Humphrey	340/572
4,686,516	8/1987	Humphrey	340/572
4,940,966	7/1990	Pettigrew et al.	340/572 X
4,980,670	12/1990	Humphrey et al.	340/572 X
5,003,291	3/1991	Strom-Olsen et al.	340/572 X
5,130,698	7/1992	Rauscher	340/572 X
5,175,419	12/1992	Yamashita	235/449
5,181,020	1/1993	Furukawa et al.	340/572 X
5,191,315	3/1993	Cordery et al.	340/572
5,313,192	5/1994	Ho et al.	340/572 X
5,519,379	5/1996	Ho et al.	340/572 X
5,565,847	10/1996	Gambino et al.	340/572
5,729,201	3/1998	Jahnes et al.	340/572

Primary Examiner—Thomas J. Mullen, Jr.
Attorney, Agent, or Firm—Stephen S. Strunck

[57] **ABSTRACT**

An inexpensive multibit magnetic tag is described which uses an array of amorphous wires in conjunction with a magnetic bias field. The tag is interrogated by the use of a ramped field or an ac field or a combination of the two. The magnetic bias is supplied either by coating each wire with a hard magnetic material which is magnetized or by using magnetized hard magnetic wires or foil strips in proximity to the amorphous wires. Each wire switches at a different value of the external interrogation field due to the difference in the magnetic bias field acting on each wire.

1 Claim, 6 Drawing Sheets

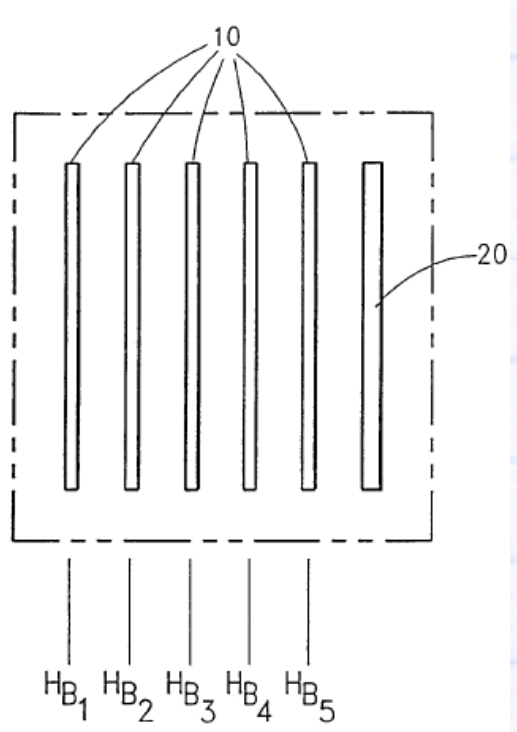

©2009 Michael L. Davis, All Rights Reserved

US 6,191,687 - Wiegand Effect Energy Generator

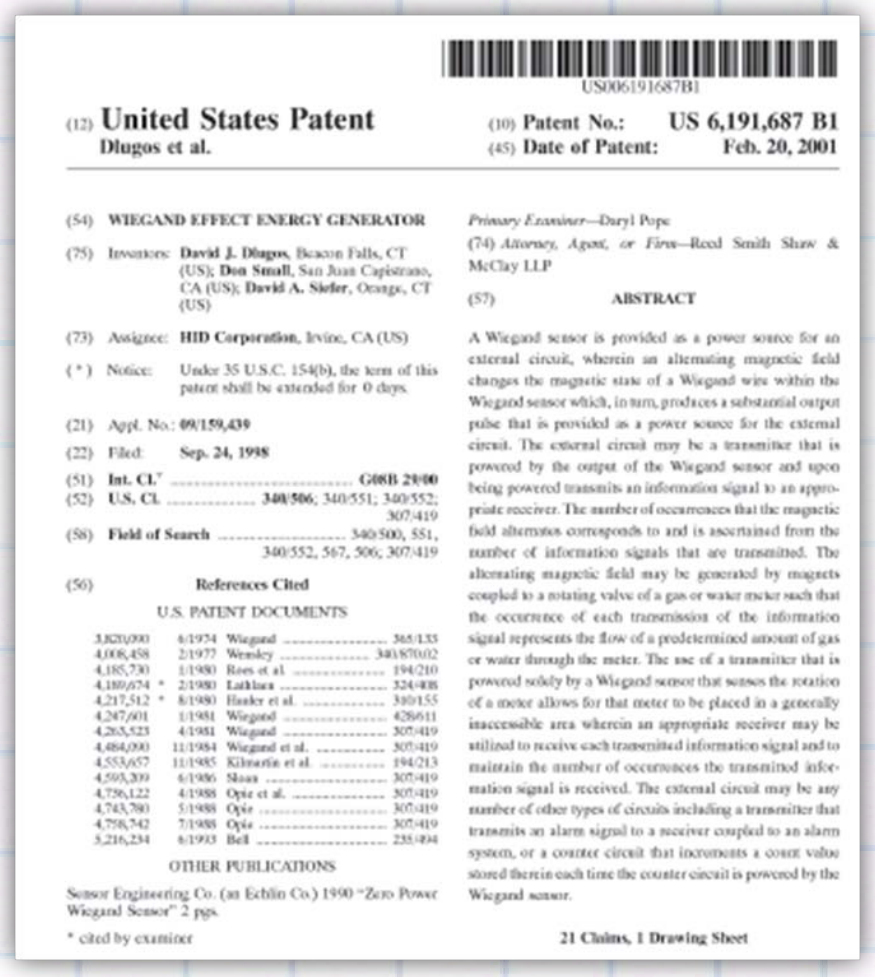

US006191687B1

(12) **United States Patent**
Dlugos et al.

(10) **Patent No.: US 6,191,687 B1**
(45) **Date of Patent: Feb. 20, 2001**

(54) **WIEGAND EFFECT ENERGY GENERATOR**

(75) Inventors: **David J. Dlugos**, Beacon Falls, CT (US); **Don Small**, San Juan Capistrano, CA (US); **David A. Siefer**, Orange, CT (US)

(73) Assignee: **HID Corporation**, Irvine, CA (US)

(*) Notice: Under 35 U.S.C. 154(b), the term of this patent shall be extended for 0 days.

(21) Appl. No.: **09/159,430**

(22) Filed: **Sep. 24, 1998**

(51) **Int. Cl.**[7] **G08B 29/00**

(52) **U.S. Cl.** **340/506**; 340/551; 340/552; 307/419

(58) **Field of Search** 340/500, 551, 340/552, 567, 506; 307/419

(56) **References Cited**

U.S. PATENT DOCUMENTS

3,820,090	6/1974	Wiegand	365/133
4,008,458	2/1977	Wensley	340/870.02
4,185,730	1/1980	Rees et al.	194/210
4,189,674 *	2/1980	Lathlaen	324/408
4,217,512 *	8/1980	Hauler et al.	310/155
4,247,601	1/1981	Wiegand	428/611
4,263,523	4/1981	Wiegand	307/419
4,484,090	11/1984	Wiegand et al.	307/419
4,553,657	11/1985	Kilmartin et al.	194/213
4,593,209	6/1986	Sloan	307/419
4,756,122	4/1988	Opie et al.	307/419
4,743,780	5/1988	Opie	307/419
4,758,742	7/1988	Opie	307/419
5,216,234	6/1993	Bell	235/494

OTHER PUBLICATIONS

Sensor Engineering Co. (an Echlin Co.) 1990 "Zero Power Wiegand Sensor" 2 pgs.

* cited by examiner

Primary Examiner—Daryl Pope
(74) *Attorney, Agent, or Firm*—Reed Smith Shaw & McClay LLP

(57) **ABSTRACT**

A Wiegand sensor is provided as a power source for an external circuit, wherein an alternating magnetic field changes the magnetic state of a Wiegand wire within the Wiegand sensor which, in turn, produces a substantial output pulse that is provided as a power source for the external circuit. The external circuit may be a transmitter that is powered by the output of the Wiegand sensor and upon being powered transmits an information signal to an appropriate receiver. The number of occurrences that the magnetic field alternates corresponds to and is ascertained from the number of information signals that are transmitted. The alternating magnetic field may be generated by magnets coupled to a rotating valve of a gas or water meter such that the occurrence of each transmission of the information signal represents the flow of a predetermined amount of gas or water through the meter. The use of a transmitter that is powered solely by a Wiegand sensor that senses the rotation of a meter allows for that meter to be placed in a generally inaccessible area wherein an appropriate receiver may be utilized to receive each transmitted information signal and to maintain the number of occurrences the transmitted information signal is received. The external circuit may be any number of other types of circuits including a transmitter that transmits an alarm signal to a receiver coupled to an alarm system, or a counter circuit that increments a count value stored therein each time the counter circuit is powered by the Wiegand sensor.

21 Claims, 1 Drawing Sheet

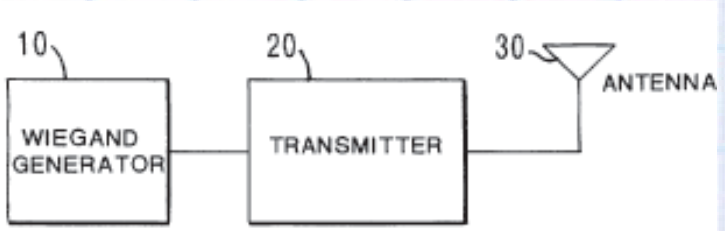

©2009 Michael L. Davis, All Rights Reserved

US 5,128,840 - Bicycle Luminaire

US005128840A

United States Patent [19]

Seki et al.

[11] **Patent Number: 5,128,840**

[45] **Date of Patent: Jul. 7, 1992**

[54] **BICYCLE LUMINAIRE**

[76] Inventors: **Hiroshi Seki**, 2265, Kamihongo, Matsudo-shi, Chiba-ken; **Kazunari Maeda**, 483, Higashi-ira-Aizenji-cho, Kamikyo-ku, Kyoto, both of Japan

[21] Appl. No.: **548,862**

[22] Filed: **Jul. 6, 1990**

[30] **Foreign Application Priority Data**

Jul. 12, 1989 [JP] Japan 1-179735
Jul. 13, 1989 [JP] Japan 1-181608

[51] Int. Cl.[5] B62J 6/00; F21V 33/00
[52] U.S. Cl. 362/72; 362/78
[58] Field of Search 362/72, 78

[56] **References Cited**

U.S. PATENT DOCUMENTS

2,083,514 6/1937 Brown 362/78
4,191,988 3/1980 Kunakura 362/72
4,225,848 9/1980 Roberts ..... 362/72 X

OTHER PUBLICATIONS

Bulletin No. 103A, "Wiegand Effect Transducers", published by Sensor Engineering Co., U.S.A.

Primary Examiner—Allen M. Ostrager
Attorney, Agent, or Firm—Fleit, Jacobson, Cohn, Price, Holman & Stern

[57] **ABSTRACT**

A bicycle luminaire has first permanent magnets on spokes of a bicycle wheel, and a detection unit fixed to a stationary portion of the bicycle. The detection unit has a second permanent magnet, a Wiegand wire and a sensing coil. In place of the first magnets, Wiegand wires can be disposed on the spokes, and the detection unit can be formed with two magnets and sensing coil.

4 Claims, 4 Drawing Sheets

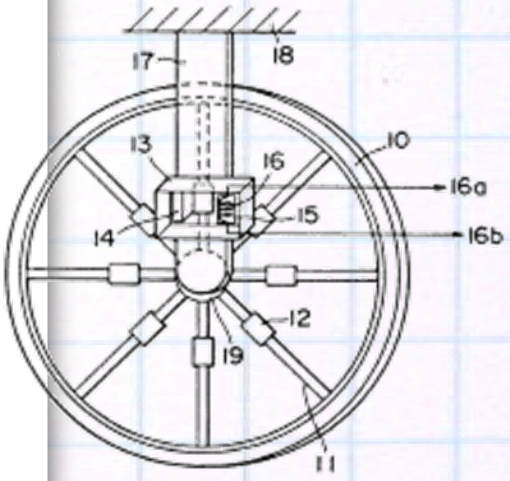

©2009 Michael L. Davis, All Rights Reserved

US 2009/024180 - Stimulation System, in Particular, a Cardiac Pacemaker

US 20090024180A1

(19) **United States**

(12) **Patent Application Publication**

KISKER et al.

(10) **Pub. No.: US 2009/0024180 A1**

(43) **Pub. Date: Jan. 22, 2009**

(54) **STIMULATION SYSTEM, IN PARTICULAR A CARDIAC PACEMAKER**

(75) Inventors: **Erhard KISKER**, Duesseldorf (DE); **Heinrich WIENEKE**, Essen (DE)

Correspondence Address:
Jason H. Vick
Sheridan Ross, PC
Suite # 1200, 1560 Broadway
Denver, CO 80202 (US)

(73) Assignee: **UNIVERSITAT DUISBURG-ESSEN**, Essen (DE)

(21) Appl. No.: **12/171,955**

(22) Filed: **Jul. 11, 2008**

Related U.S. Application Data

(63) Continuation-in-part of application No. PCT/EP2006/012193, filed on Dec. 18, 2006.

(30) **Foreign Application Priority Data**

Jan. 13, 2006 (DE) 102006001968.7
Feb. 17, 2006 (DE) 102006007403.3
Sep. 8, 2006 (DE) 102006042850.1

Publication Classification

(51) **Int. Cl.**
A61N 1/362 (2006.01)

(52) **U.S. Cl.** **607/32**

(57) **ABSTRACT**

A stimulation system, an implantable electrode device and a method for operating an implantable electrode device are proposed. A simplified implantation, a simple construction and reliable control are made possible by the electrode device being supplied with energy, and controlled, in an exclusively wireless manner via a time-variable magnetic field. The magnetic field is generated by an implanted control device.

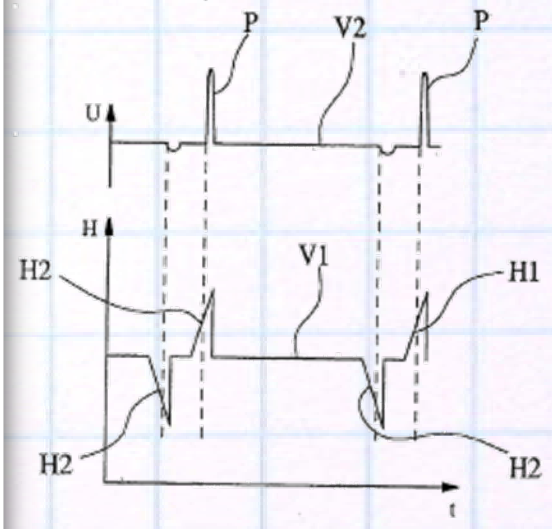

Fig. 7

© 2009 Michael L. Davis, All Rights Reserved

THE WIEGAND PROTOCOL

© 2009 Michael L. Davis, All Rights Reserved

Wiegand Wires Moving Past Read Head Generates Pulses = Wiegand Protocol

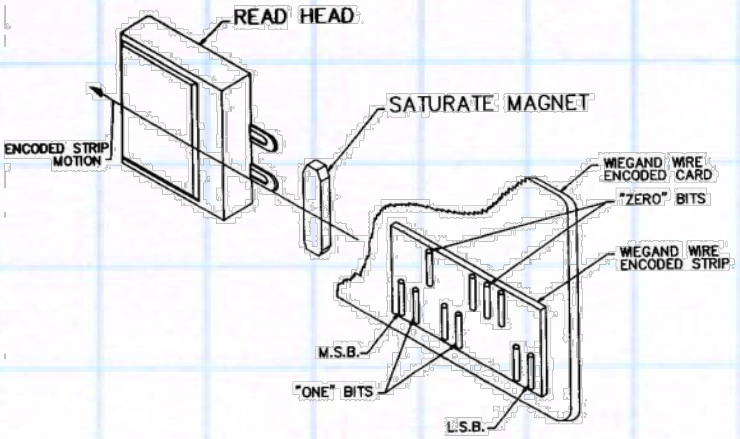

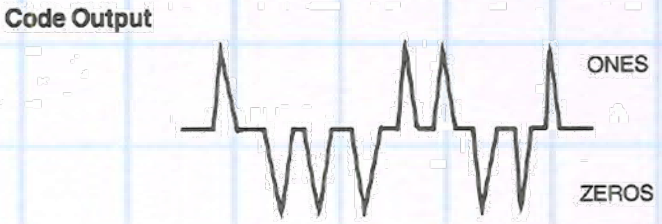

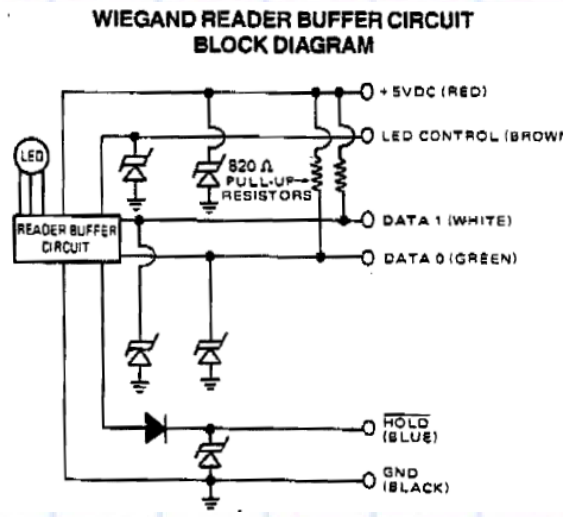

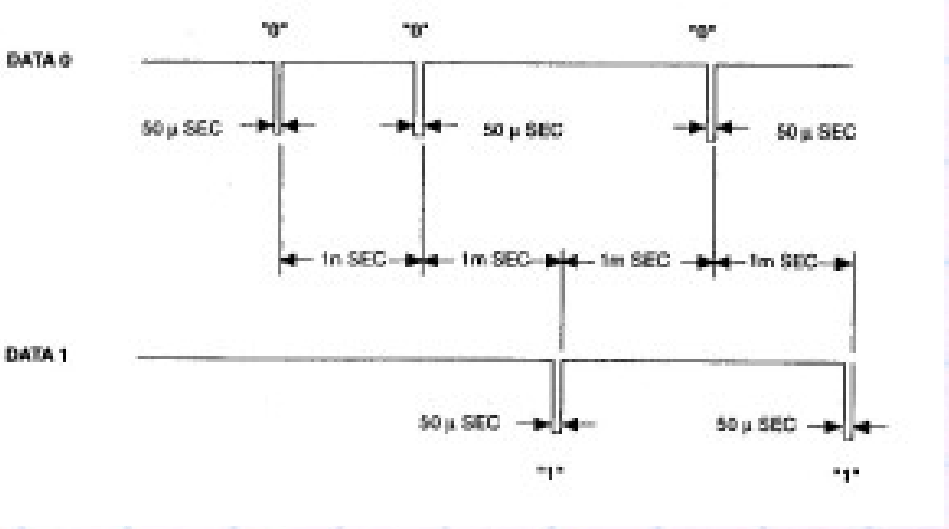

© 2009 Michael L. Davis, All Rights Reserved

HACKING WIEGAND CARDS & THE WIEGAND PROTOCOL

© 2009 Michael L. Davis, All Rights Reserved

Hacking Wiegand Cards

- In 1992, Bill Payne, an employee of Sandia Labs was assigned to break electronic systems for the FBI.
- He found a way to expose the wires using Magnaview film and a cow magnet and then published this information.
- Even though he claims that this was not classified, the FBI thought otherwise.
- He was fired and is still trying to clear his name.



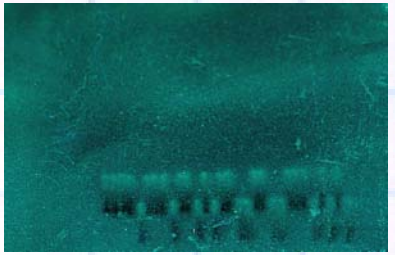

Photo from Black Hat presentation by Schmiedl & Spindel



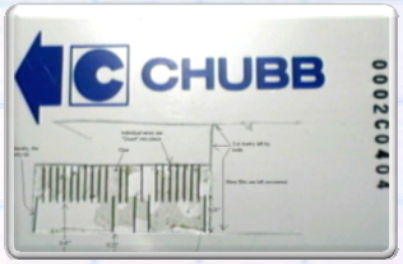

© 2009 Michael L. Davis, All Rights Reserved

Hacking the Wiegand Protocol

- At DEFCON 13, Zamboni described a theoretical attack on a Wiegand output biometric-based system which he called "Wiegand Injection".



Zamboni-AP Photo by Joe Cavaretta.jpg

- At DEFCON 15, Zac Franken demonstrated a Wiegand Protocol replay device called GECKO.



Gecko Photo by Zac Franken

© 2009 Michael L. Davis, All Rights Reserved

WRAP UP

© 2009 Michael L. Davis, All Rights Reserved

Dedication

- Since 1978, I owe my livelihood to the electronic physical access control industry.
- In my humble opinion, I truly feel that John's Wiegand Card Readers was the foundation of this industry as we know it today.
- Indeed, the Wiegand protocol is still used by the majority of access control readers.
- I once had the privilege of meeting John in his lab in Valley Stream, NY.

© 2009 Michael L. Davis, All Rights Reserved

The Future - Stay Tuned

- I will post fascinating material that I find at **www.wiegand-effect.com**
- A colleague of mine, Dr. Scott Guthery, planted the seed for me to write a book on the subject.
  - However, based on the realization of how much research is required, I currently have no timetable for completion as I am still in data gathering mode
- Perhaps, next year, if DEFCON allows me to speak again, I can share more of John and his wonderful wires as well as demos of his devices and the physics behind his Wiegand Effect
- Email: mike@wiegand-effect.com

© 2009 Michael L. Davis, All Rights Reserved