How to hack your way out of home detention

About me

- William “@Amm0nRa” Turner
- @Assurance



Disclaimer:

- I own this system (and 0wn it)
- The following information is for academic purposes only
- Don’t use this for evil
- If you do, you may go to jail



Home Detention Systems

- Used to monitor 'low risk' criminals in their homes. e.g.:
  - “Woman gets home detention in ‘green card’ immigration scheme” [October 2014, Los Angeles]
  - Private investigator who “hacked” email gets 3 months jail, 6 months home detention [June 2015, New York]



How home detention systems work

- Older systems ran over phone lines, used RF for anklet bracelet proximity
- Newer systems use GPS, cell network as well as short range RF

In America

- “On a normal day some 200,000 people wake up with a black plastic box strapped to their leg” – James Kilgore, 2012

Getting hold of one

- Very hard to even get info
- Social Engineered a 'sample' unit out of a Taiwan manufacturing company for ~$1k - “GWG International Inc”
- Different states/police forces use different trackers, difficult to know if/where this unit is used in the USA.
- Other trackers probably have at least some of the same vulns
- Lacked detailed manuals - found car tracking system running same 'OS’ (GS-818 - SAN JOSE TECHNOLOGY, INC)



Operation

- GPS for location, home base unit with short range RF, tamper detection
- Battery life depends on configuration, can be recharged without removing anklet
- Base unit also has battery to deal with power outages
- Communicates over SMS or GPRS (TCP socket) with server
- Accepts commands to change settings – username and password

The System – base unit





The System – base unit

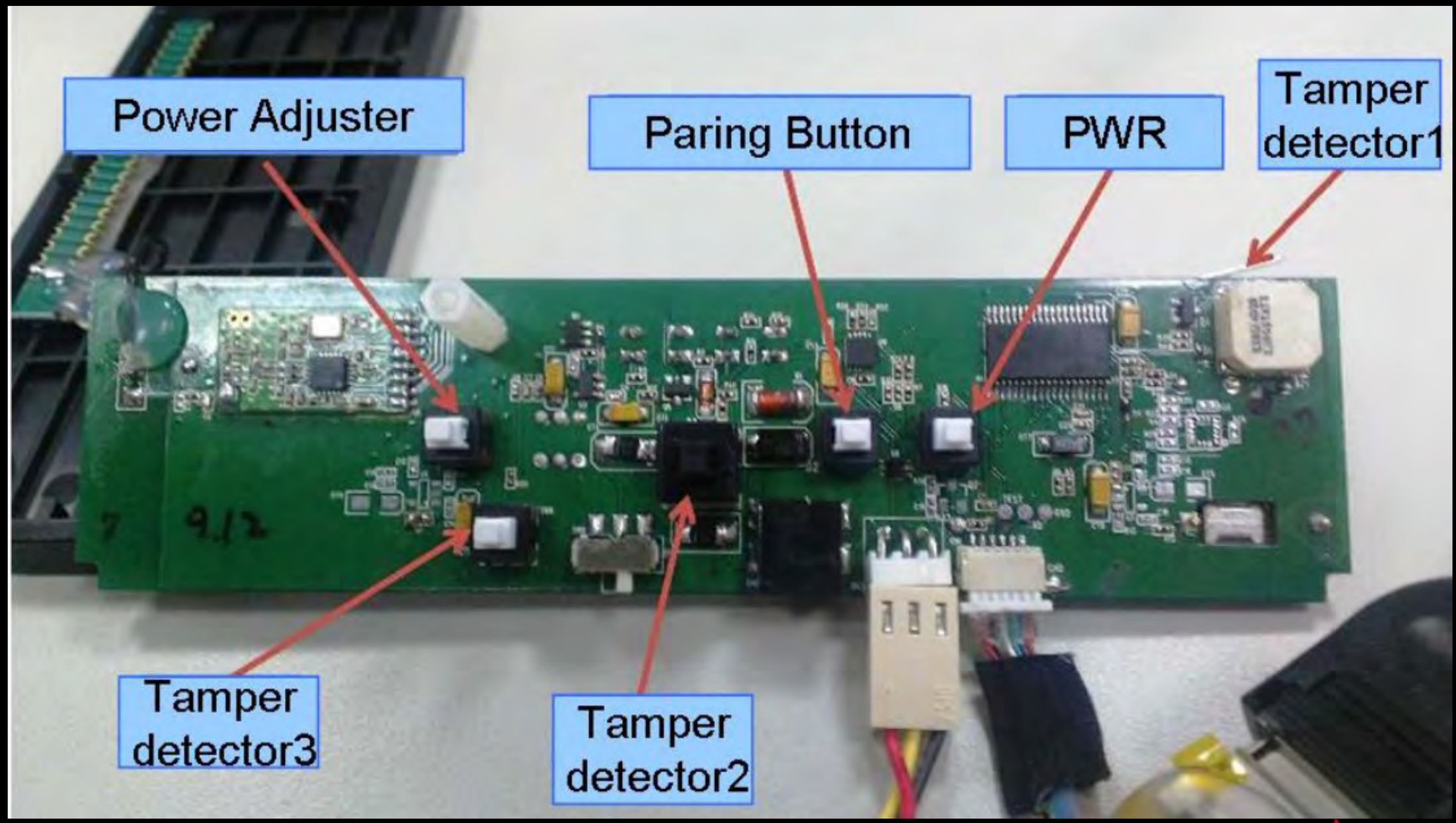

Internals Teardown

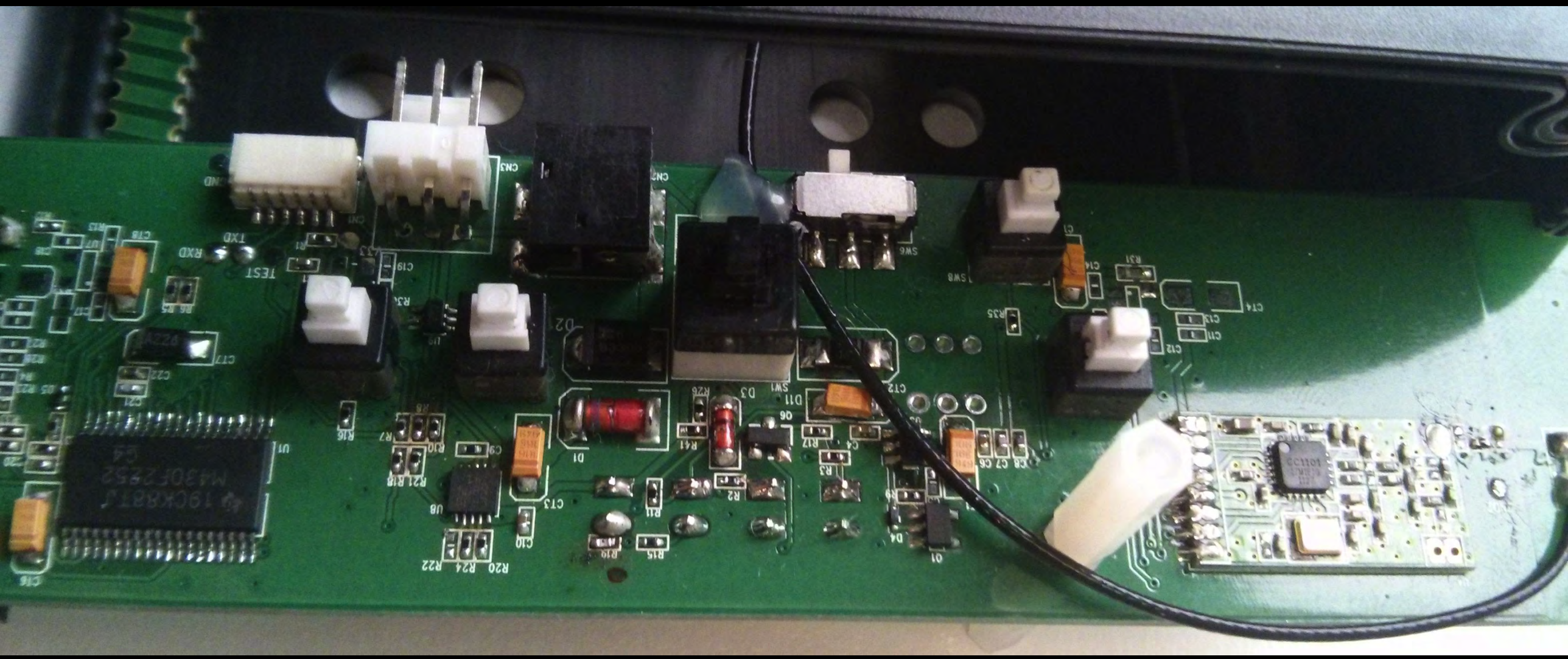

ASSURANCE

Anklet





ASSURANCE

Anklet:

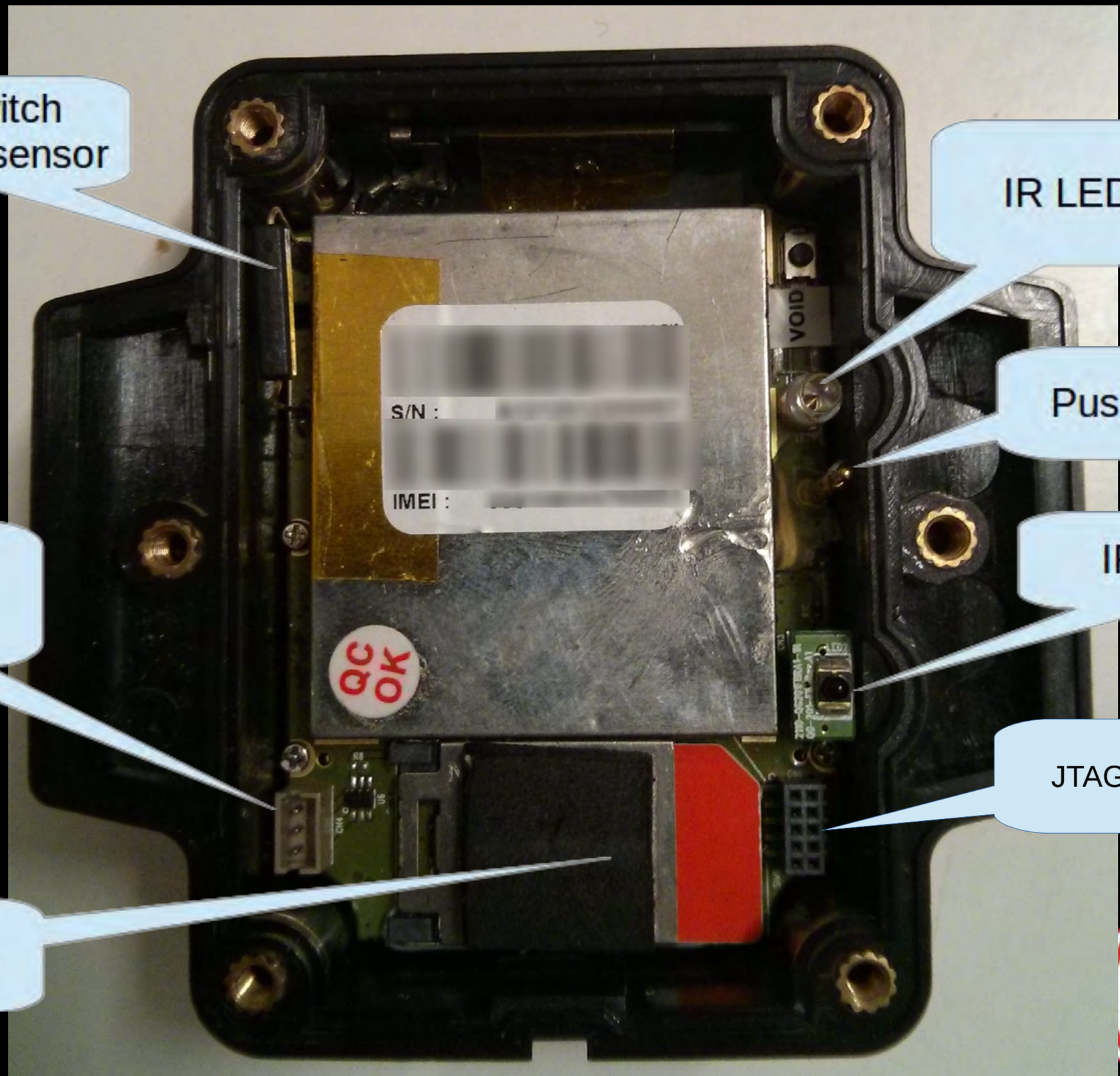
reed switch
magnetic sensor
IR LED
Push pin button
power
IR sensor
JTAG Header(?)
SIM card
S/N :
IMEI :
QC
OK
VOID

Anklet Internals



Cinterion MC551

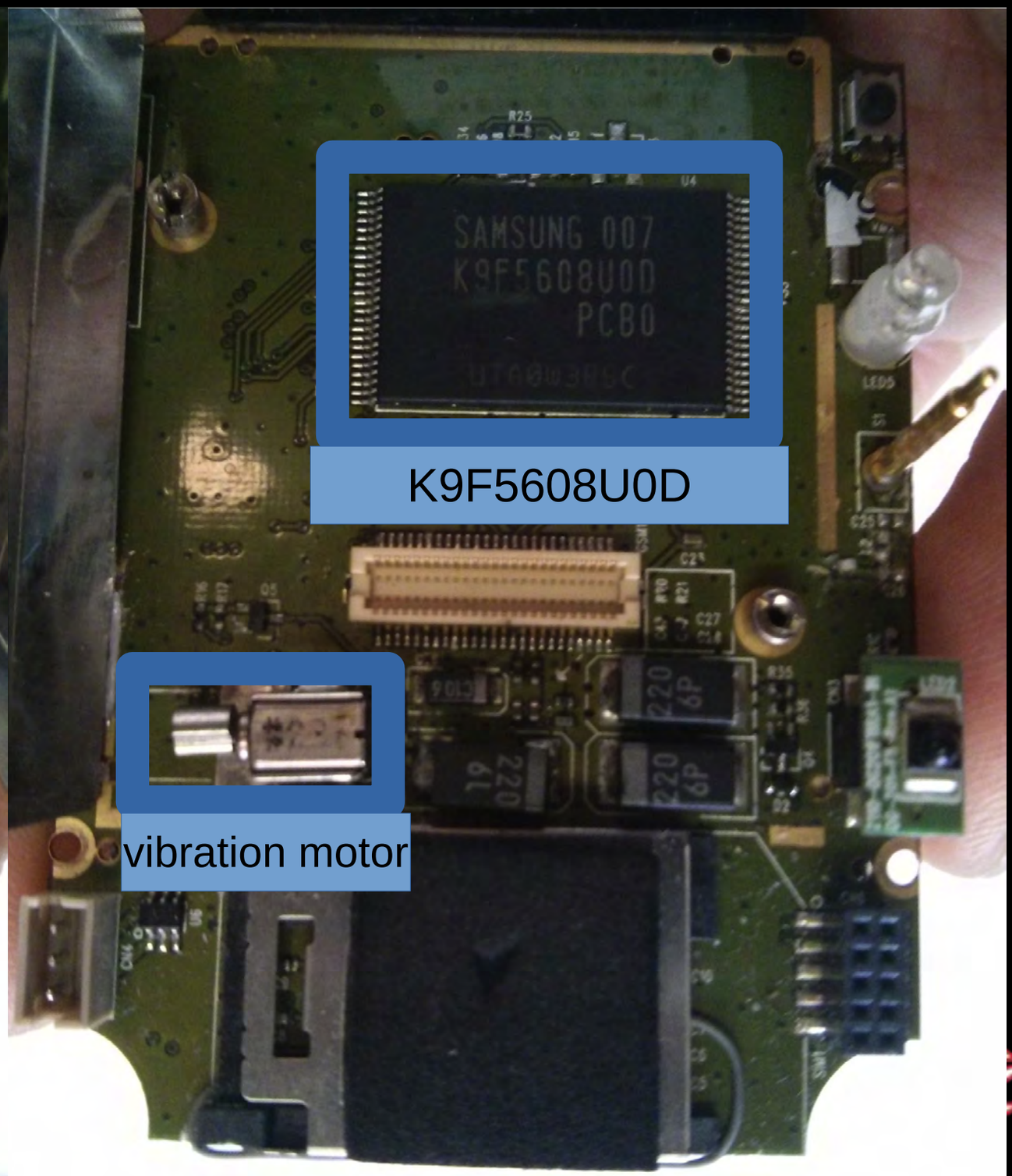

K9F5608U0D

vibration motor

Anklet Internals

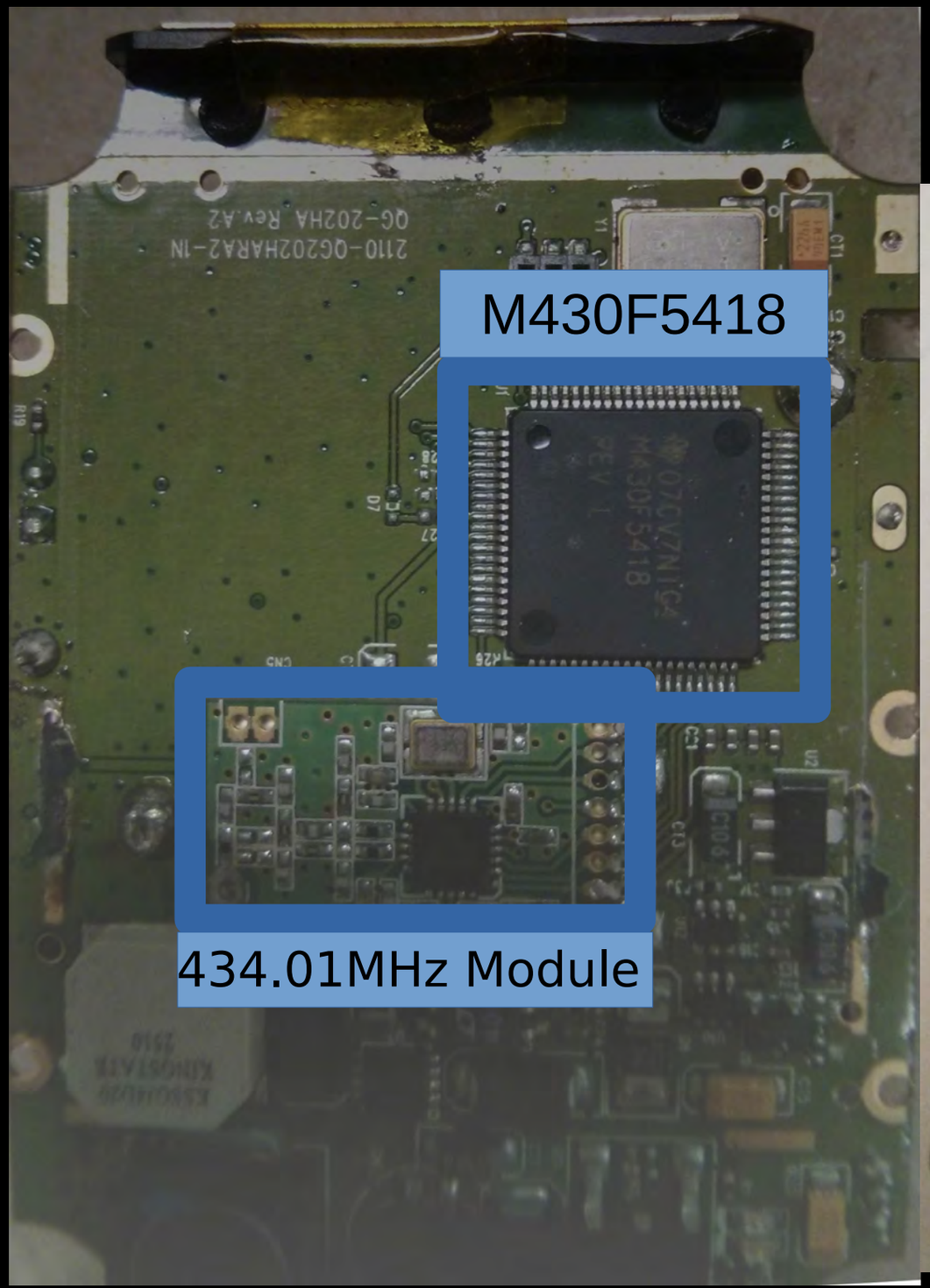



Operation

- Interesting commands/features which can be set/enabled/triggered:

username
network APN
SMS numbers
Geo-Fence coords
vibration alert
clear log
reed switch detection

password
SMS-TCP mode
status report interval
buzzer
log to file settings
fiber optic break detection



GSM Security

- GSM is encrypted using A5/1 (/2/3)
- Ki embedded in SIM card used to authenticate SIM, network not authenticated – well known issue
- Kc is temporary key used to encrypt traffic
- IMEI used as unique ID, phone number only known by network, not SIM



SDR

- SDR – software defined radio
- BladeRF



YateBTS

- Open source GSM stack – based on OpenBTS, allows JS scripts to control network functions
- Can be used to spoof real network. need to find MCC/MNC of local telcos - illegal
- Faraday cage ($2 roll of tin foil) to block real telco signal and encourage connecting to rogue network



MitMing

- If in TCP mode, can simply MitM socket – easy
- If in SMS mode, much harder, but doable



Intercept status messages

- #username, $GPRMC,110834.902,V,3750.580,S,14459.1854,E,0.00,0.00,141014,,*07,ST-1-M27-0-3885mV-50.0

- username – used to auth commands sent to anklet, sent in status messages

- $GPRMC...*07 is a NMEA standard “Recommended minimum specific GPS/Transit data”, GPS cords/timestamp

- 07 is hex checksum on GPS data

Understanding message

- Last part of message: e.g. ST-1-M27-0-3885mV-50.0
- Not fully decoded, but not required
- Does include: RF beacon code, charging status
- Possibly includes message type, battery charge, local cell towers



Spoofing SMS

- Many different 'providers'
- costs ~30c per sms
- We will be using smsgang.com
- Must know the number to spoof...
- 3 ways to get it...



Pull SIM card

- Why not just do this normally?
- Replace with another SIM card?



Brute force pin

- Default pin is 0000, start brute force with dictionary attack

- Need to drop status messages and let anklet retransmit on real network

- Once pin is found: have full control of device. To get number, change config to send status to phone you control



Brute force pin

- Pin must be 4 chars long
- Only allows letters and numbers
- Math.pow(36, 4) == 1,679,616
- “SMS transmission speed of about 30 SMS messages per minute”
- Around 39 days to try every possible pin



Kraken rainbow tables

- Karsten Nohl (BlackHat 2010)
- Allow reversing Kc of GSM traffic captured from air using SDR
- Once Kc is known, can decrypt SMS/GPRS/voice
- Can forge messages
- Send forged message to your own phone to get number



Kraken rainbow tables

- Not able to stop real messages
- But if you have a faraday cage and two SDRs...
- Kc changes often
- Probably have to wait a long time to snoop command – get pin



“Alcoholics Anonymous”



ASSURANCE

Live Demo!

- Assume we have the anklet number from one the attacks I just described
- Faraday cage, spoof network
- Decode message, replace latlngs
- Recalculate checksum, encode
- Script POST to SMS spoof service
- Google map to points, green – delivered to phone, red – captured by spoofed network

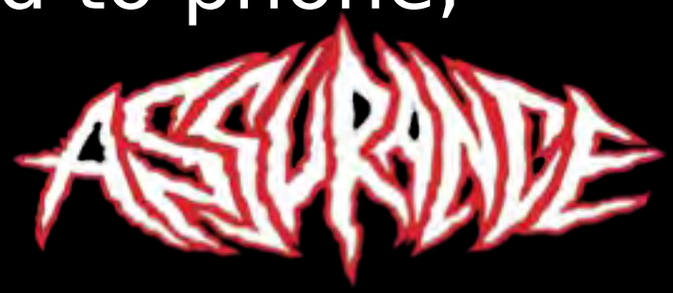

RF Base Unit

- Uses 434.01 MHz
- Frequency Shift Keying (FSK)
- Heartbeat beacon every 10 seconds

Attacks?

- Static – doesn’t change until rebooted (unknown: unique to each device?)
- Record base station heartbeat with hackRF/BladeRF/other SDR, replay



BLACK HAT

- DO NOT USE THIS IN THE REAL WORLD
- YOU WON'T MAKE IT TO JAIL



System detection

- War drive scanning for base unit RF beacons
- Slow/expensive – unless you can detect RF from a long range. Better to use court docs/newspapers to get names and dox
- Jam base station, cell, gps – cheap, easy – very illegal
- Spoof real network and brute force pin, take control of anklet, impersonate user/ crack Kc, get number, jam real device, spoof fake coords



BLACKHAT/Monetization

- If people break the rules of their sentence, they normally go to jail.

- Black mail user? How?
- Sell spoofing device/service
- Do 'cyber hit's on people for a fee



Summary

- Home detention systems have issues
- Could be improved – mutal auth, encryption
- Can't be improved/hard – jamming, user locating



Future?

- Try to get code exec from malformed SMS?
- Remove IC, dump ROM and look for bugs/backdoors
- Write software 'emulator' for the anklet – pull SIM and plug into any smartphone
- Use SDR to spoof GPS – see other talk happening right now...
- Questions?
- I probably ran out of time, so talk to me later

