BEHIND THE SCENES OF THE DEFCON 27 BADGE

JOE GRAND AKA KINGPIN

BADGE HISTORY







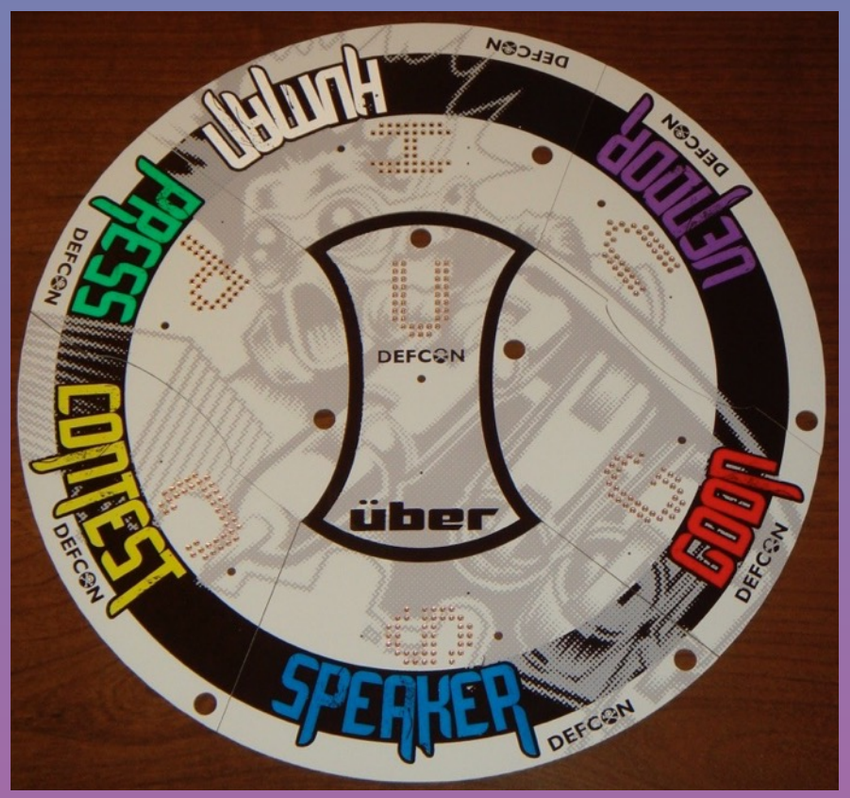



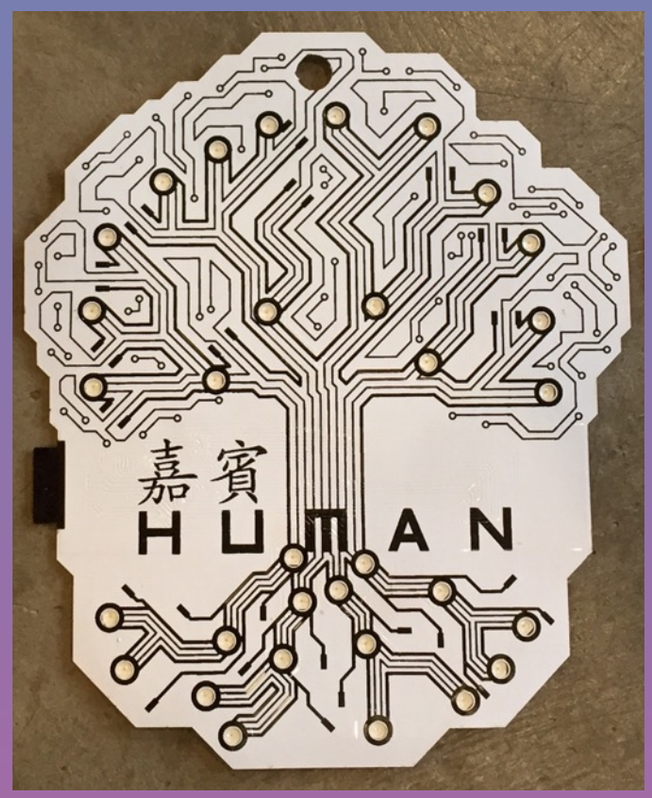

GOALS

- CREATE A GAME TO ENCOMPASS THE DEFCON EXPERIENCE
- USE TECHNOLOGY TO BRING COMMUNITY TOGETHER
- ACCESSIBLE TO ALL DEFCON ATTENDEES



GAMEPLAY / BADGE QUEST

- STATES DENOTED BY LED PATTERNS
- ADVANCE TO THE NEXT STATE BY COMPLETING TASKS
  - SOME REQUIRE DISCOVERY OF MAGIC TOKENS
  - ALL REQUIRE INTERACTION WITH OTHER PEOPLE
- WHEN ALL TASKS ARE COMPLETE, CELEBRATE

HARDWARE

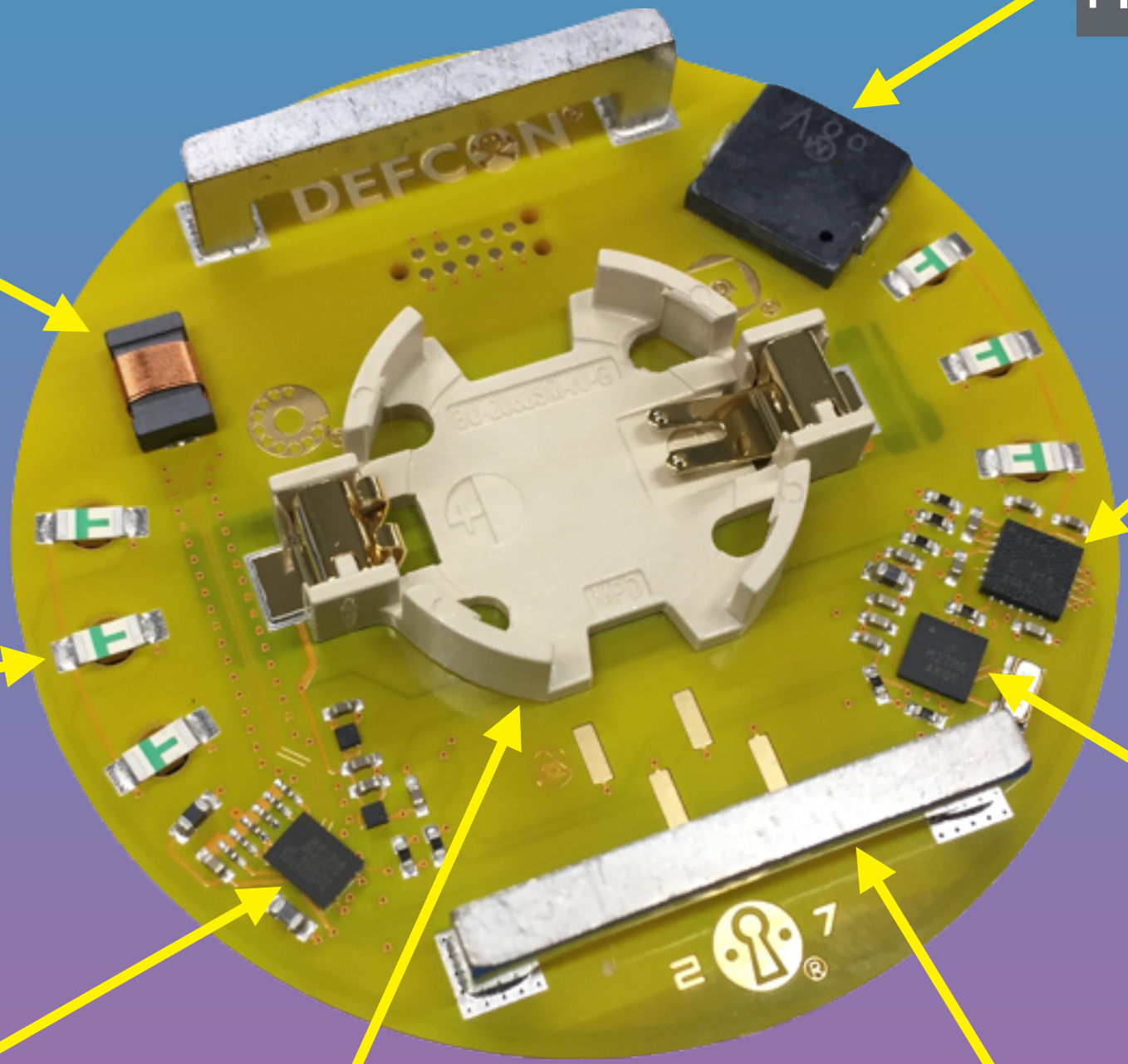
DEFCON
PIEZO
ANTENNA
LED DRIVER
LED
MCU
NFMI
POWER
LANYARD STRAP

BLOCK DIAGRAM

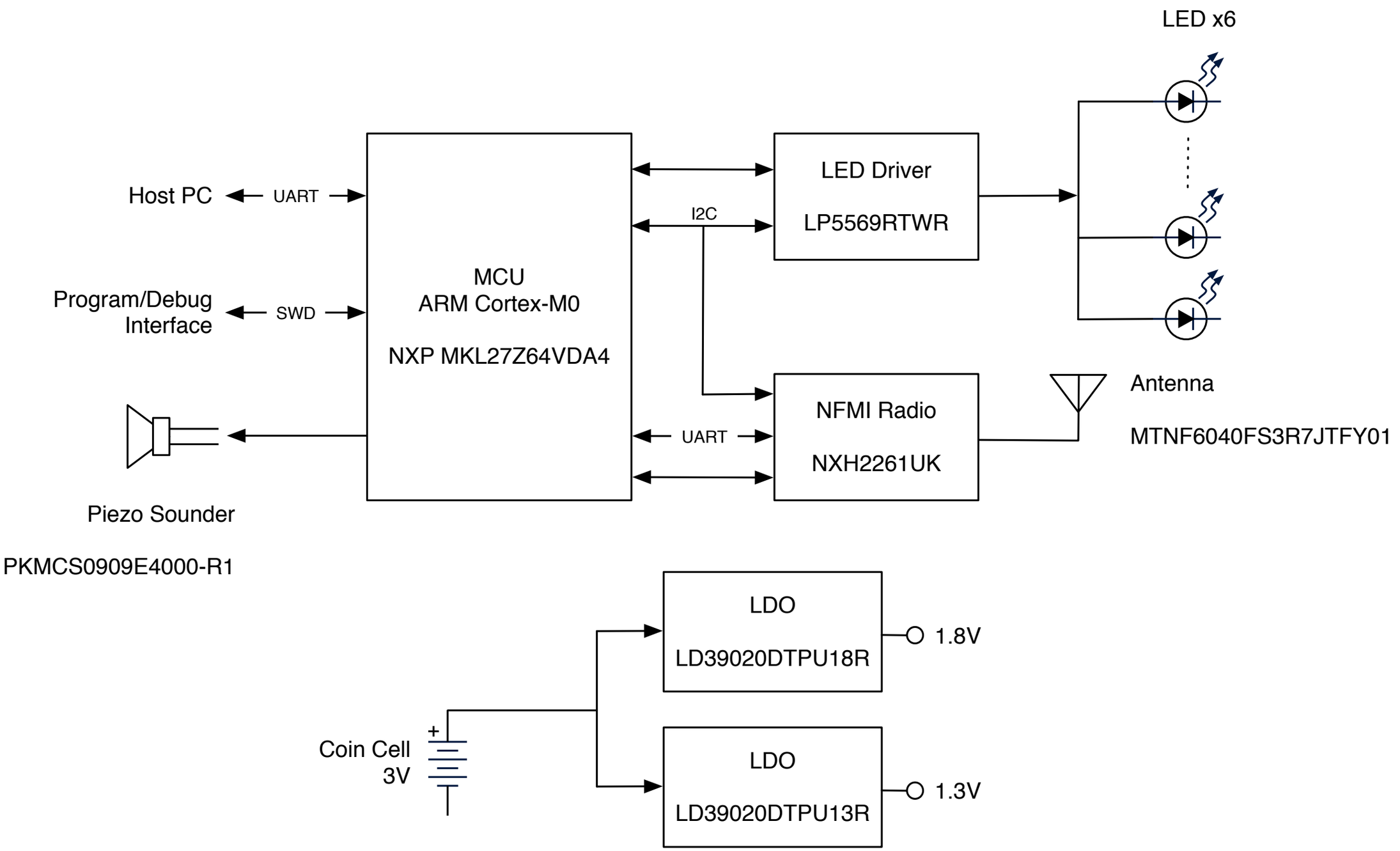

MCU

- NXP KL27
  - ARM-CORTEX M0+
  - 64KB FLASH, 16KB SRAM
  - DC27: GPIO, I2C, LPTMR, TPM, UART (2)

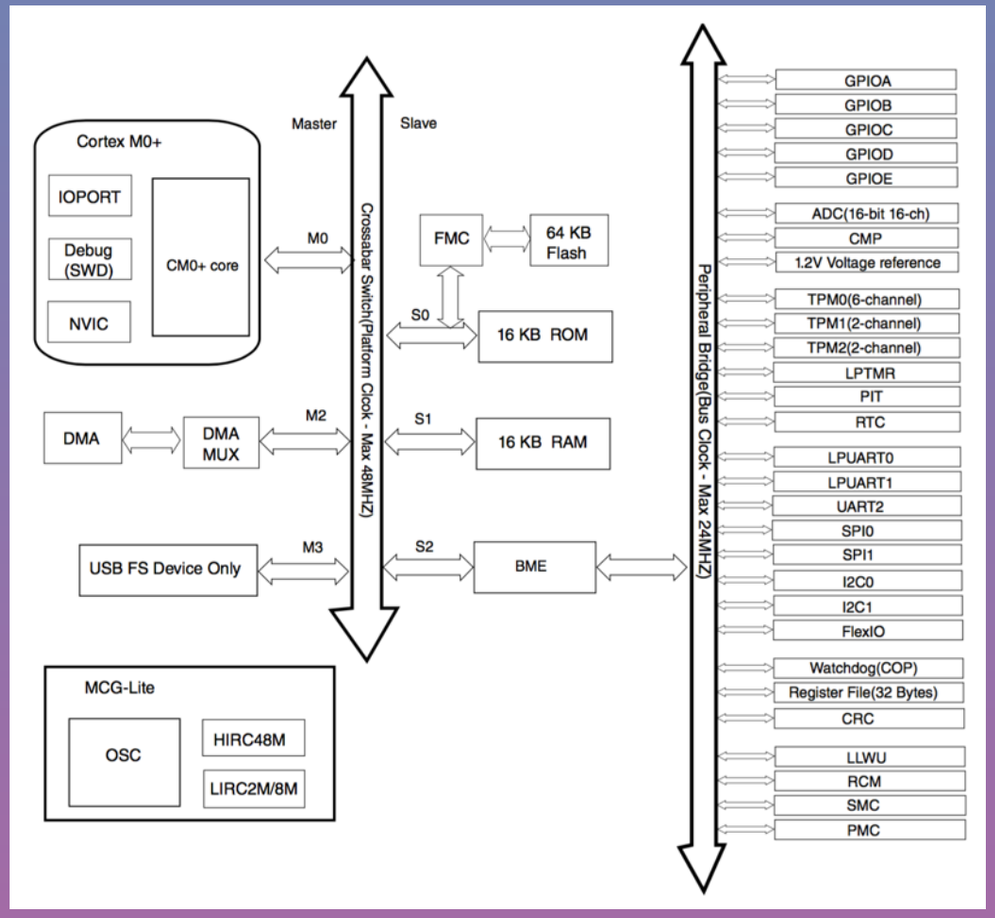

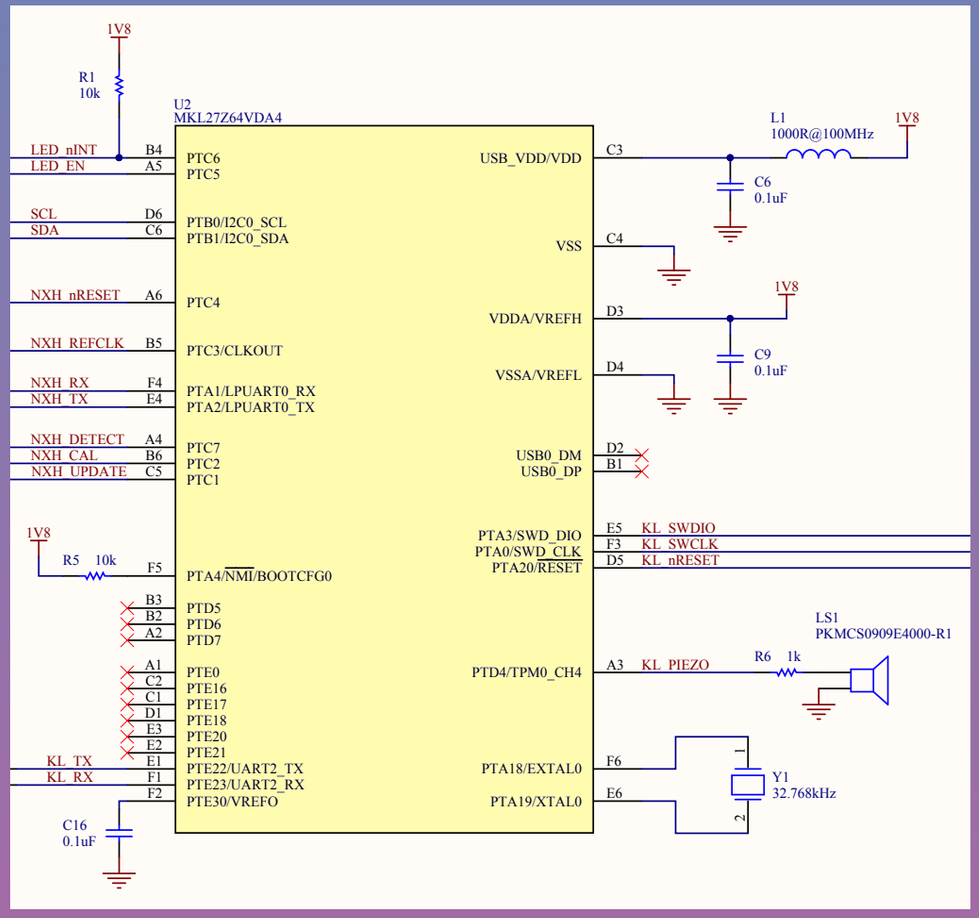

NFMI

- NEAR FIELD MAGNETIC INDUCTION
- LOW POWER, NON-PROPAGATING FIELD BETWEEN DEVICES
- DESIGNED FOR SHORT RANGE DATA AND / OR AUDIO TRANSFER (< 1M)
  - HEARING AIDS, WIRELESS EAR BUDS, BODY AREA NETWORK / TACTICAL

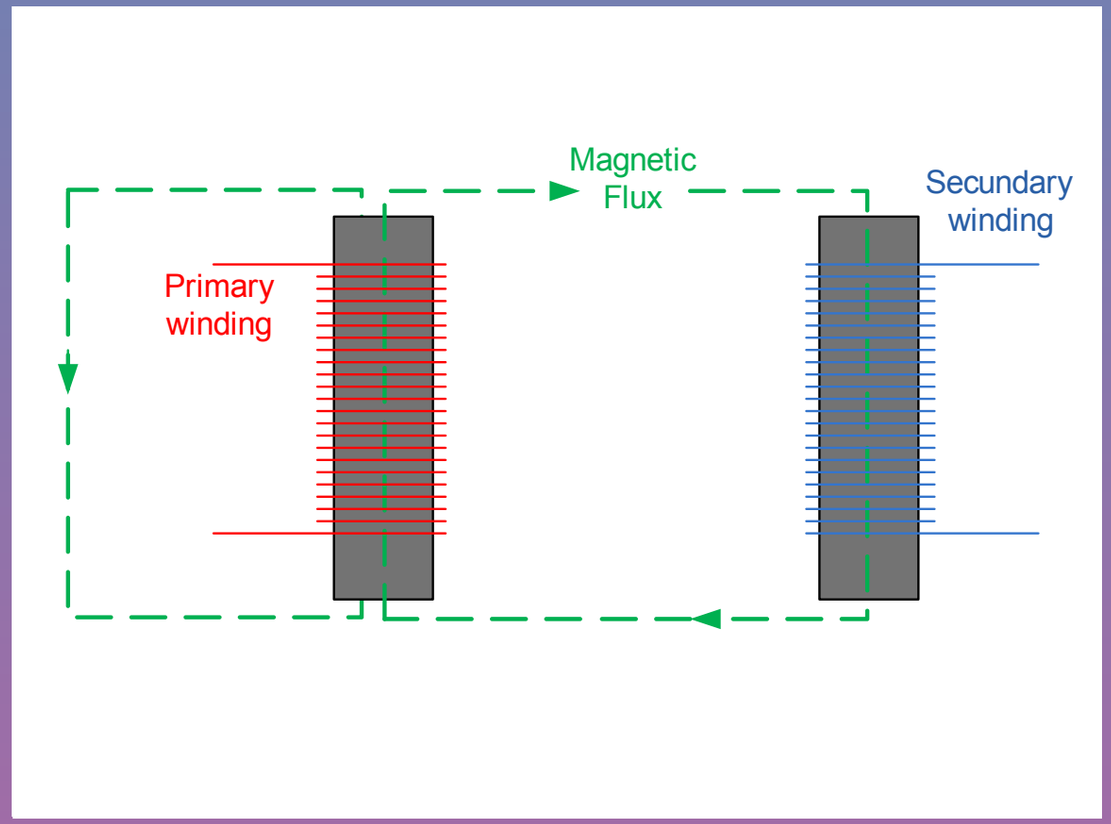

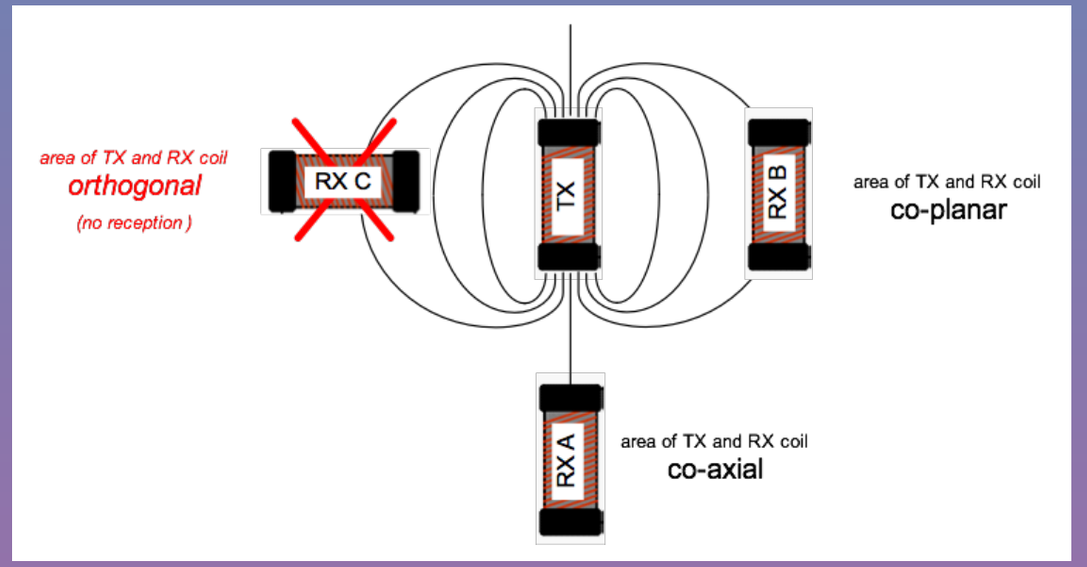

MiGLO

NFMI

- NXP MIGLO
- NXH2261 = NFMI + ARM
  - INTERNAL EEPROM (FIRMWARE) PROGRAMMED VIA I2C ON POWER-UP
  - UART TO / FROM KL27
  - GPIO FOR STATUS / INTERRUPT
- 10.58MHZ CARRIER, 596KBPS
- CUSTOM MULTI-BADGE DATA TRANSFER CODE BY NXP FOR DC27
  - LPBROADCAST_NXH_DC27.EEP.H

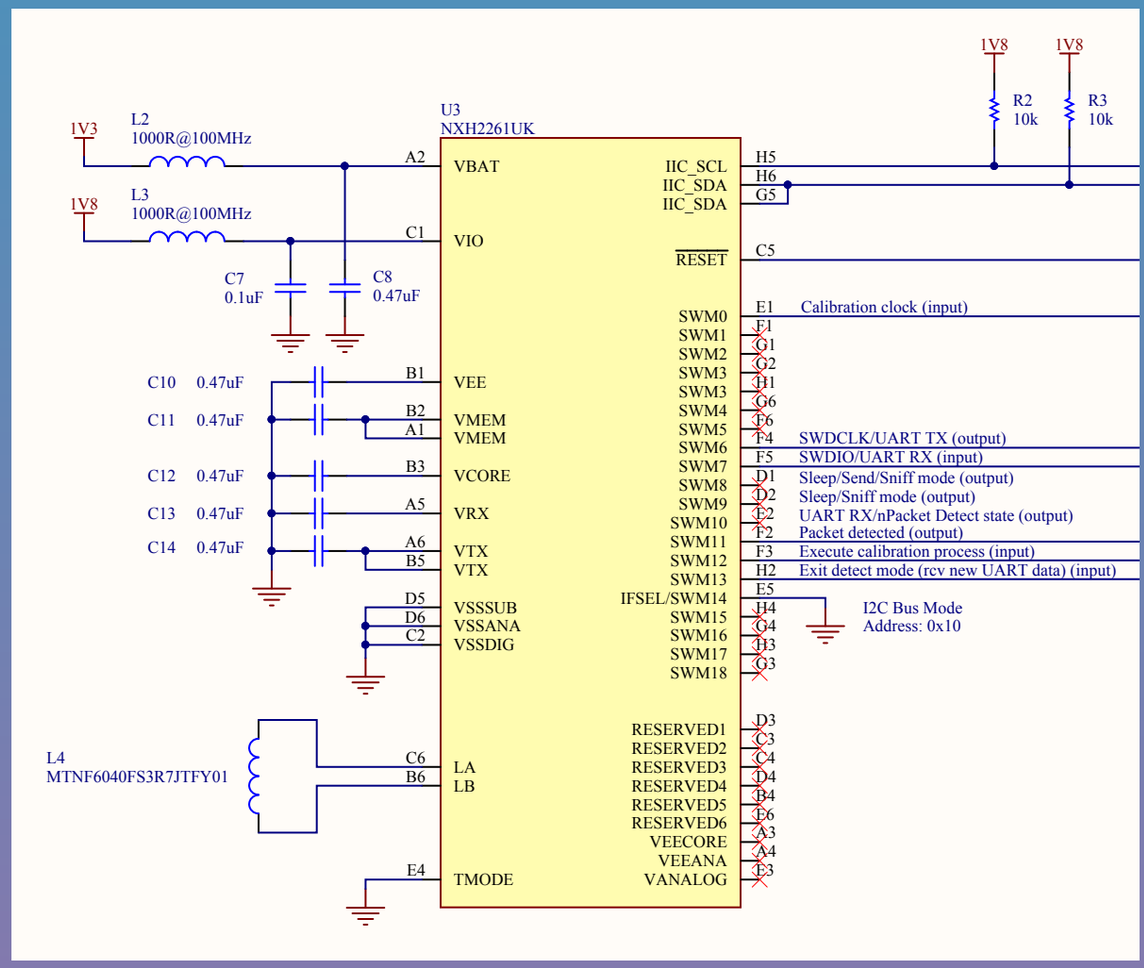

NFMI

- DATA PACKET AKA "PACKET OF INFAMY"
  - BROADCAST TO ANY DEVICE WITHIN RANGE

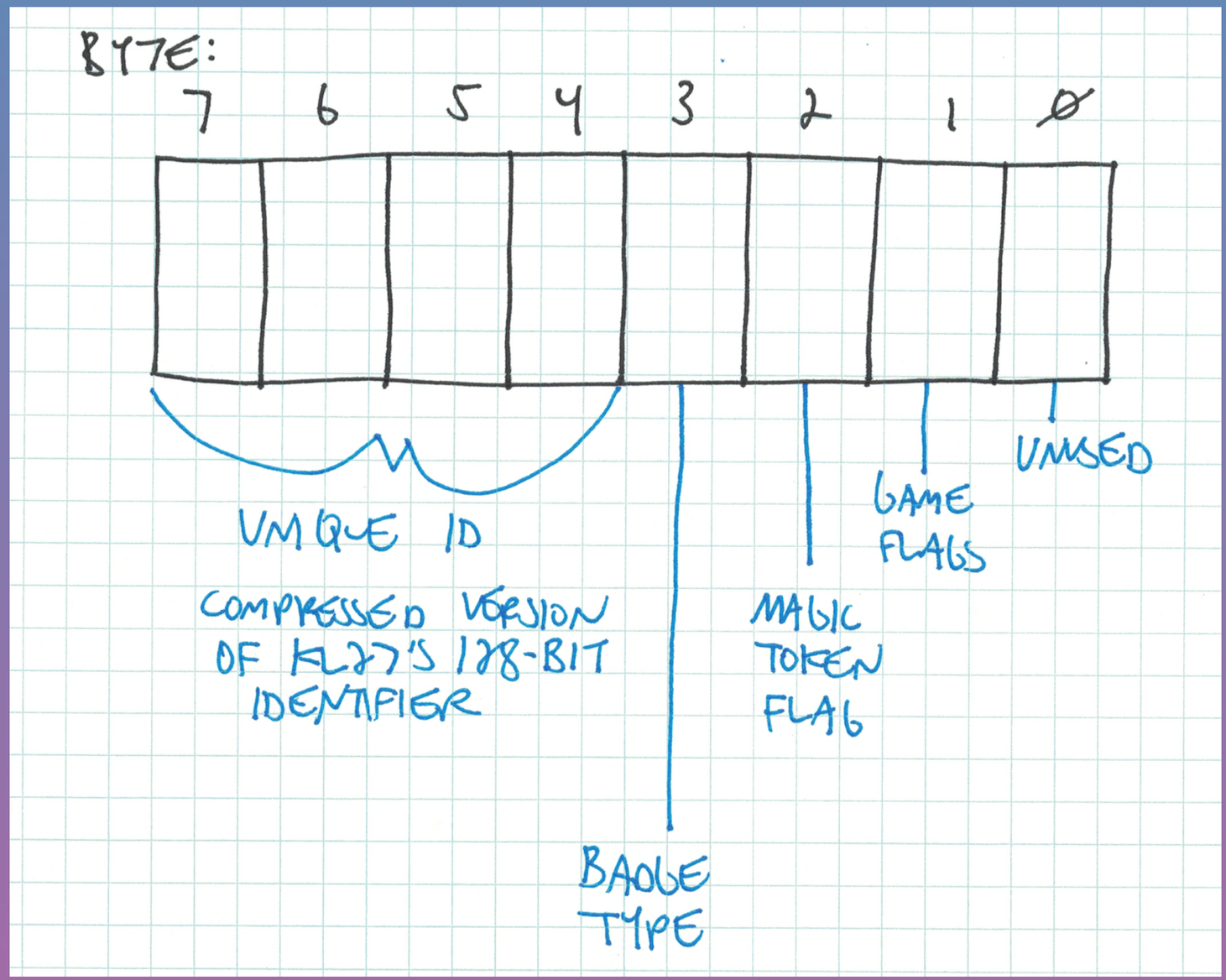

LED DRIVER

- TEXAS INSTRUMENTS LP5569
  - 1.5X CHARGE PUMP = HIGH VF LEDS @ LOW VIN
  - AUTOMATIC POWER SAVE MODE (10UA)
- EACH LED INDIVIDUALLY ADDRESSABLE, DIMMABLE (12-BIT PWM @ 20KHZ)
- CURRENT OUTPUT VARIES PER COLOR, SET ON POWER-UP (8-BIT, 100UA STEP)

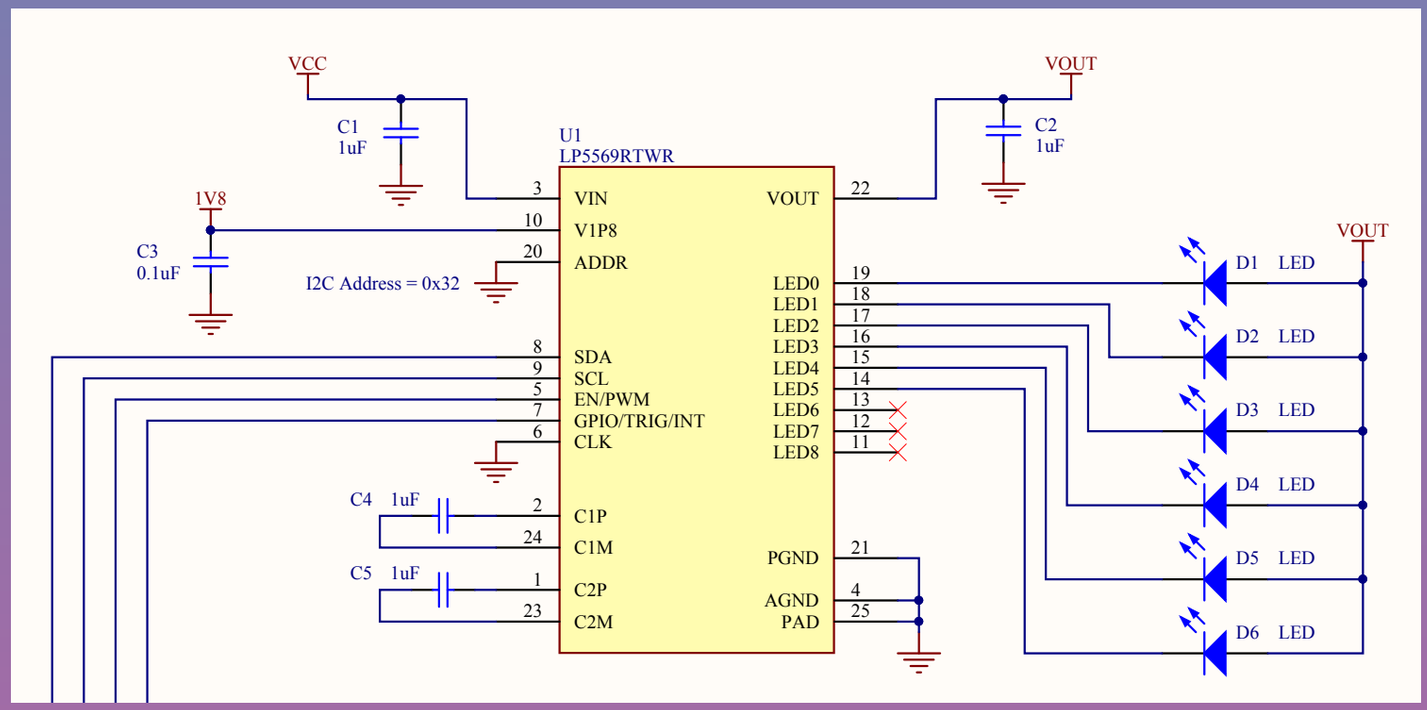

MOUNTING OPTIONS

- LANYARD
- LANYARD CLIP
- WATCH STRAP
- HEADBAND
- BROOCH / AMULET
- ???

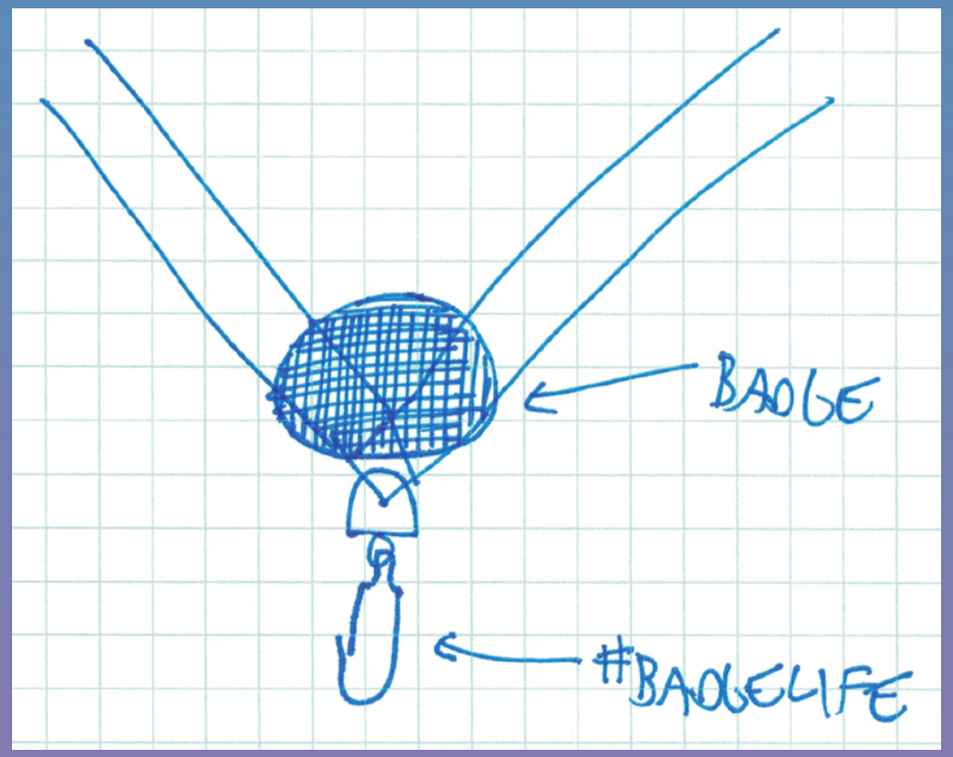

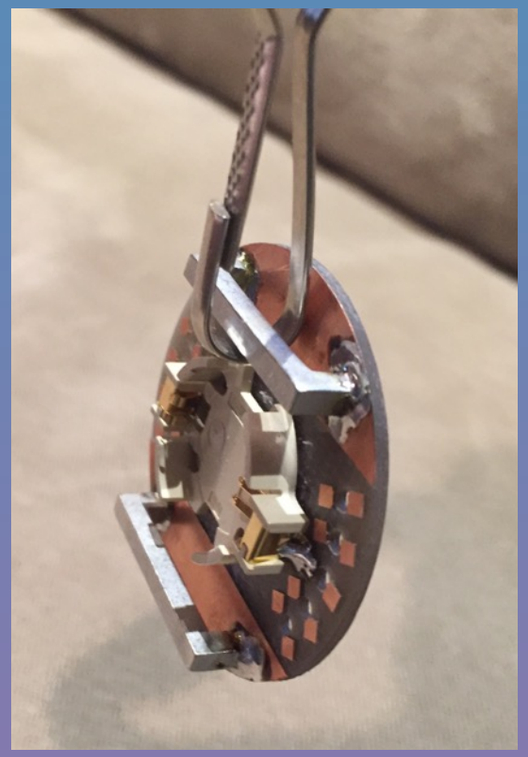



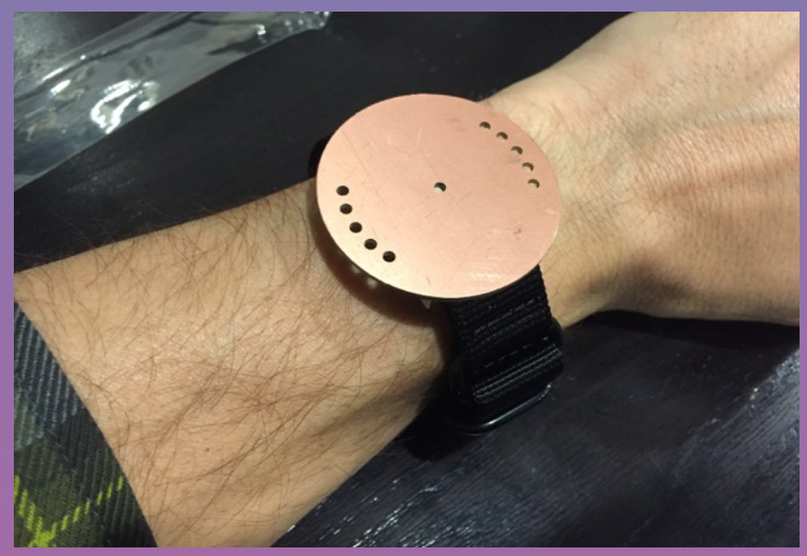

EARLY CONCEPTS





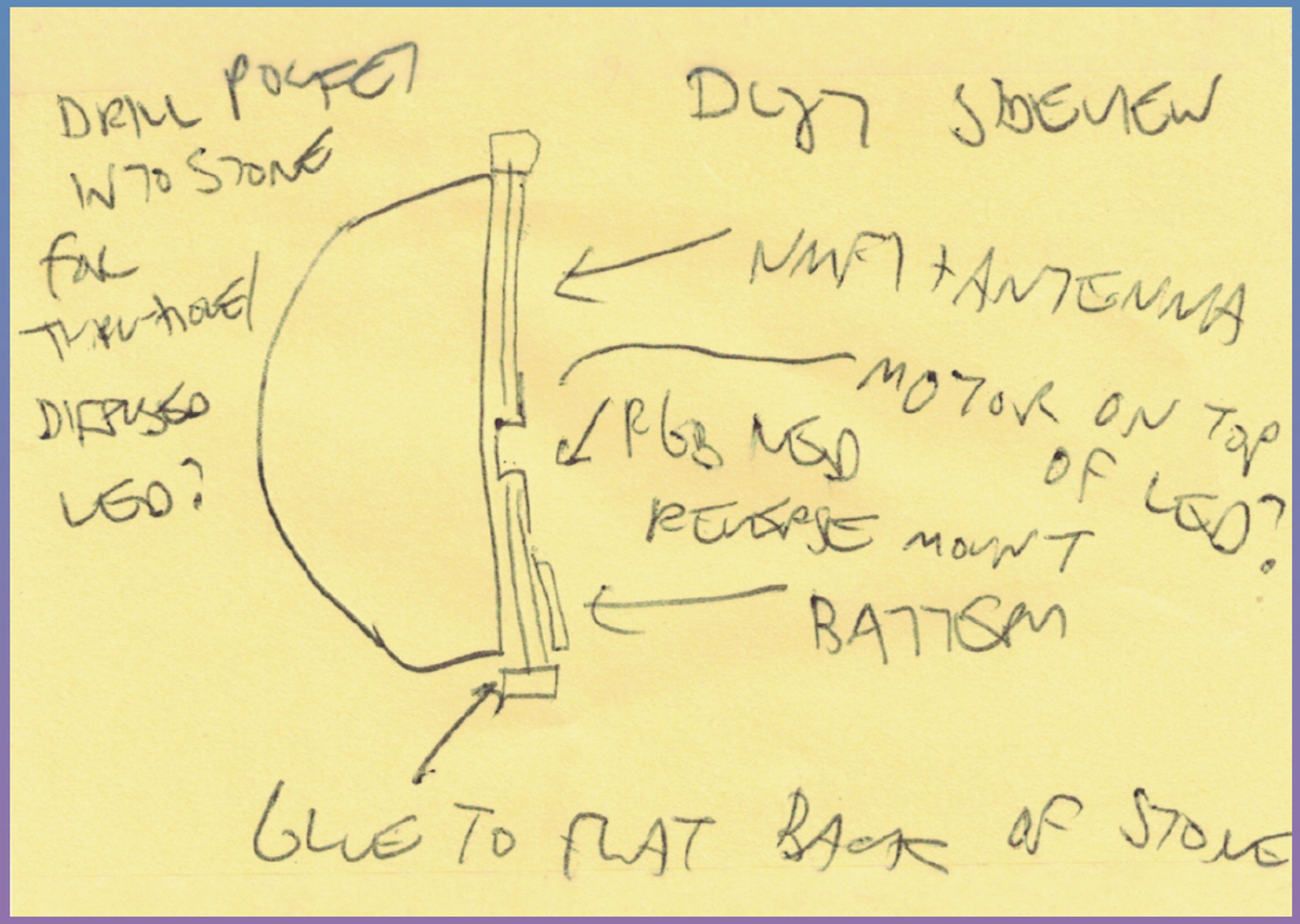

PROTOTYPING / DEVELOPMENT

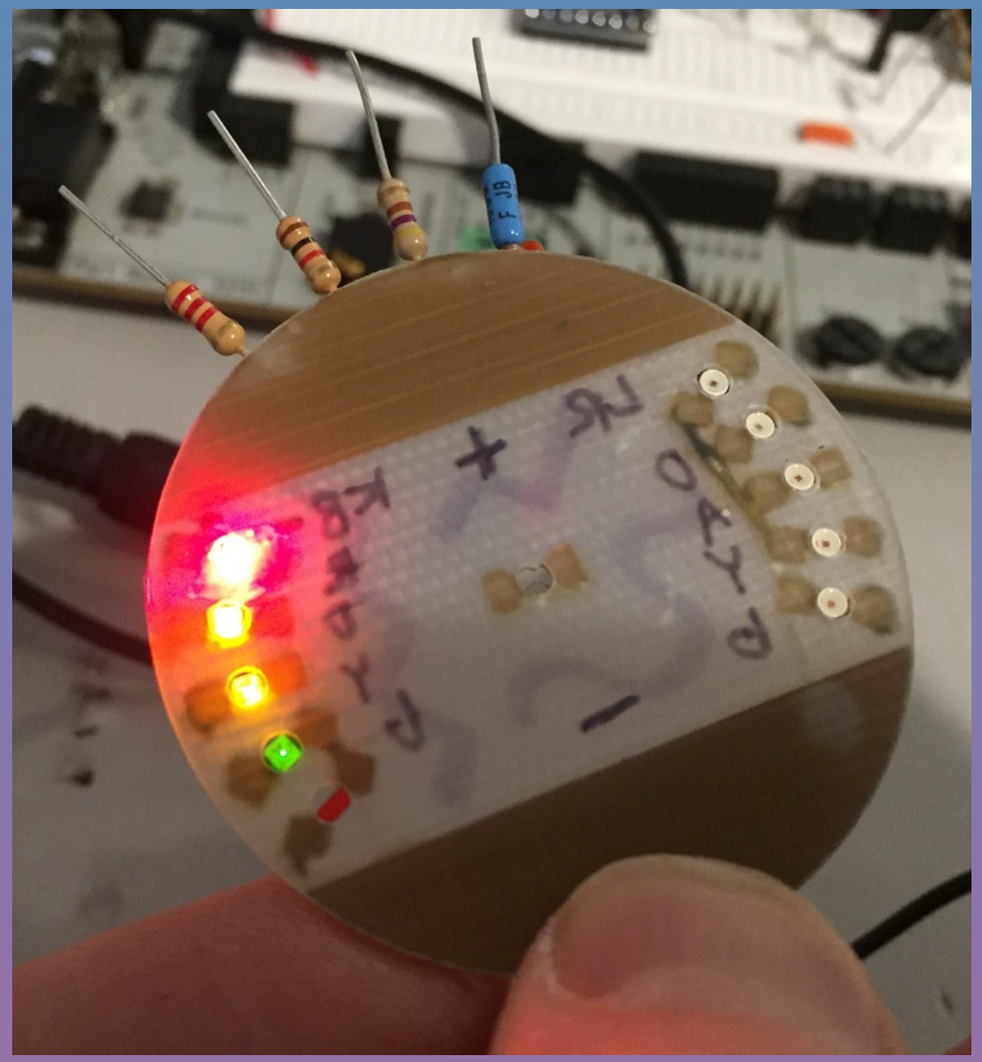

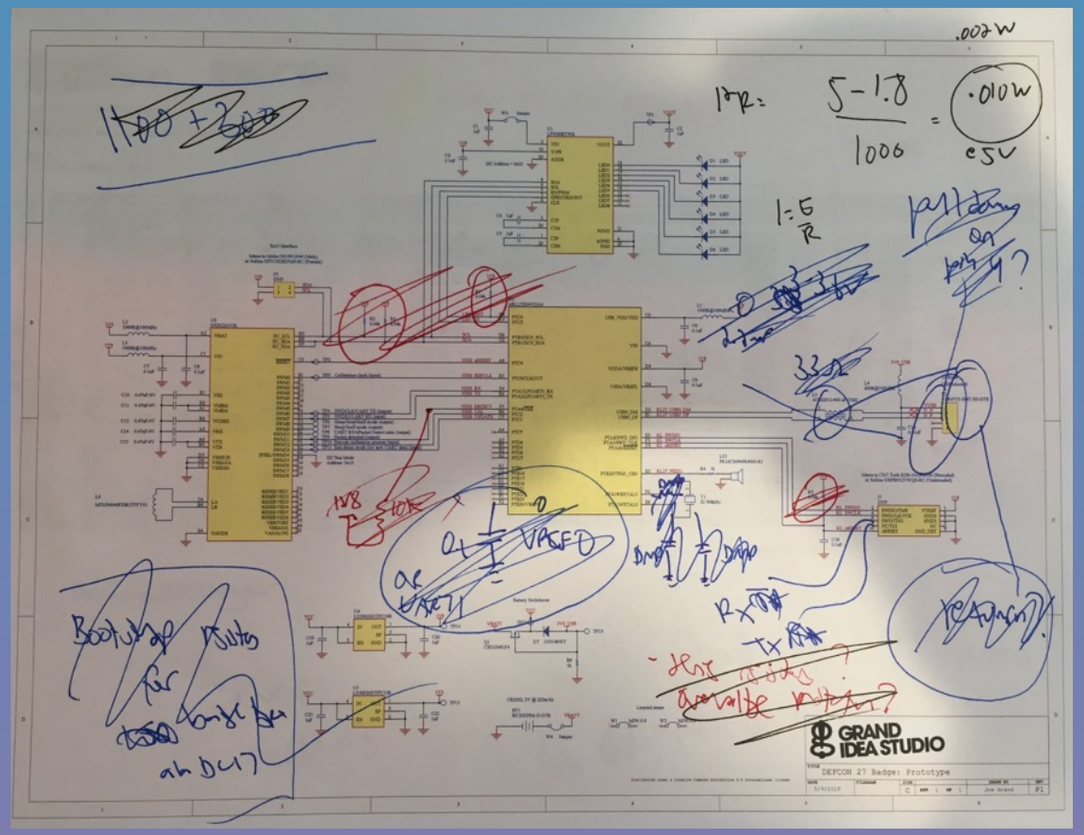

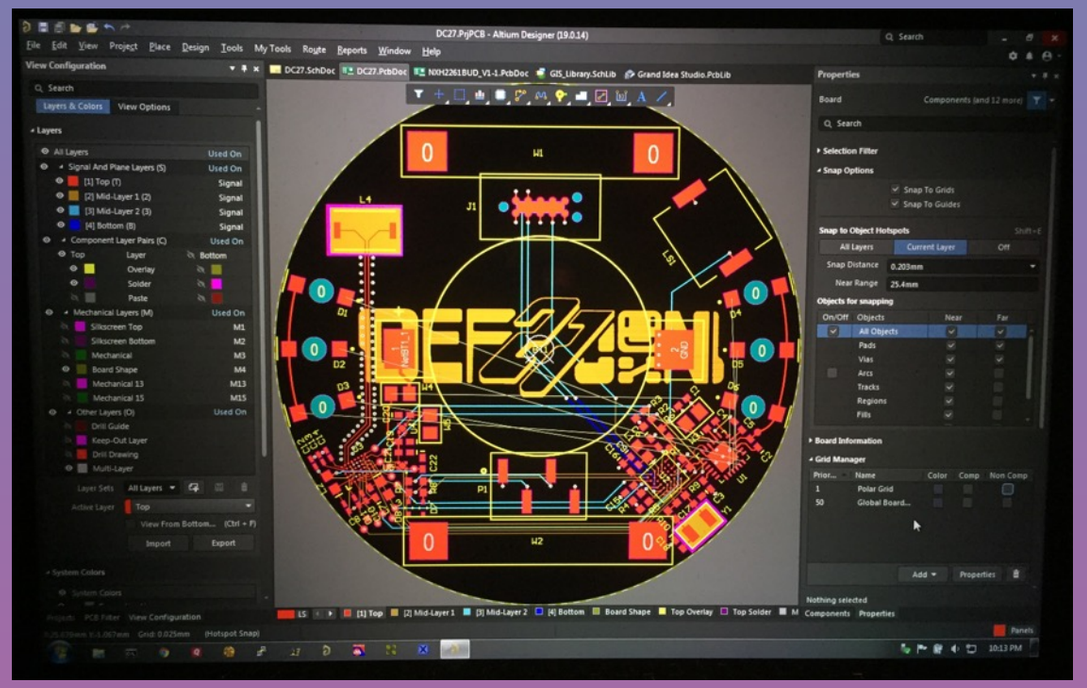

PROTOTYPING / DEVELOPMENT

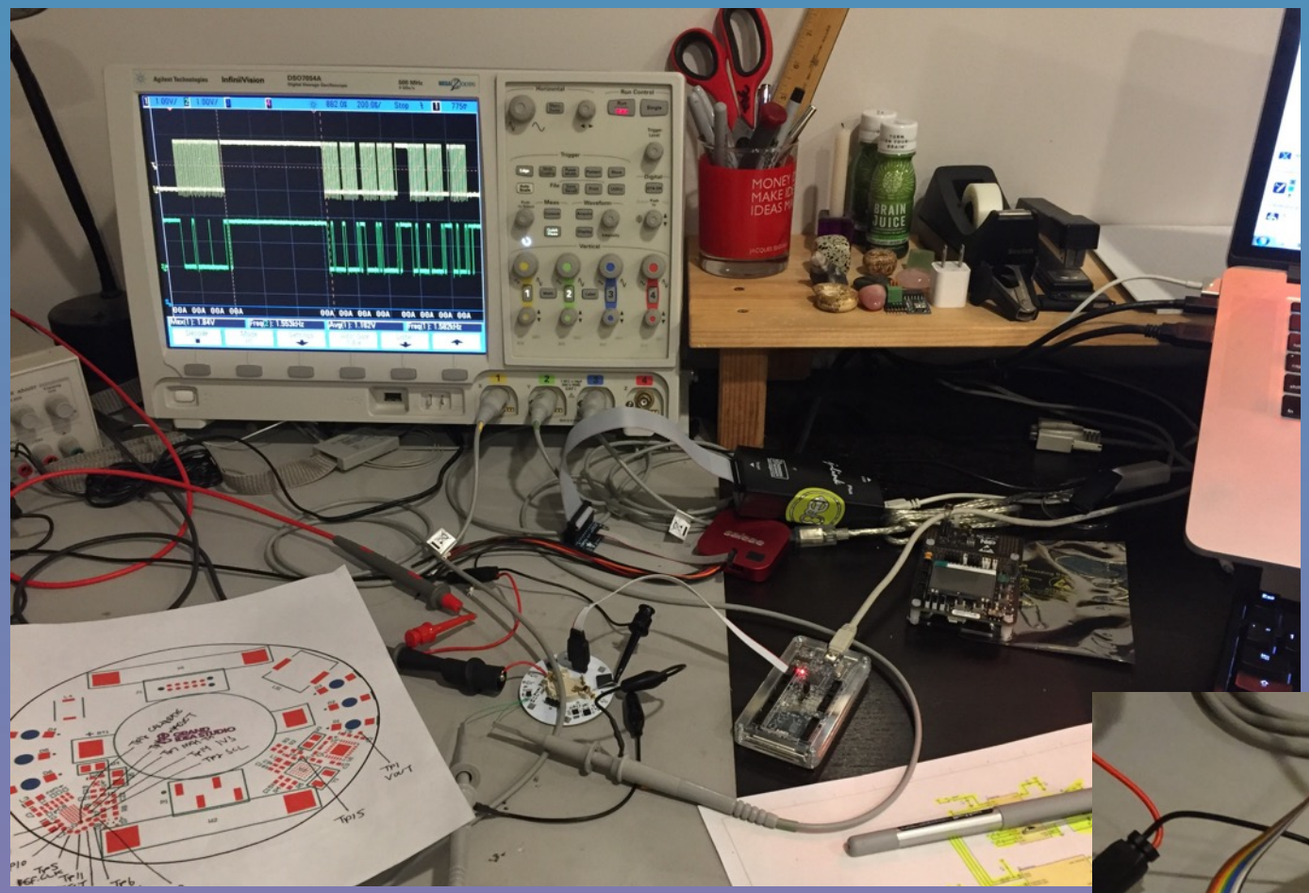

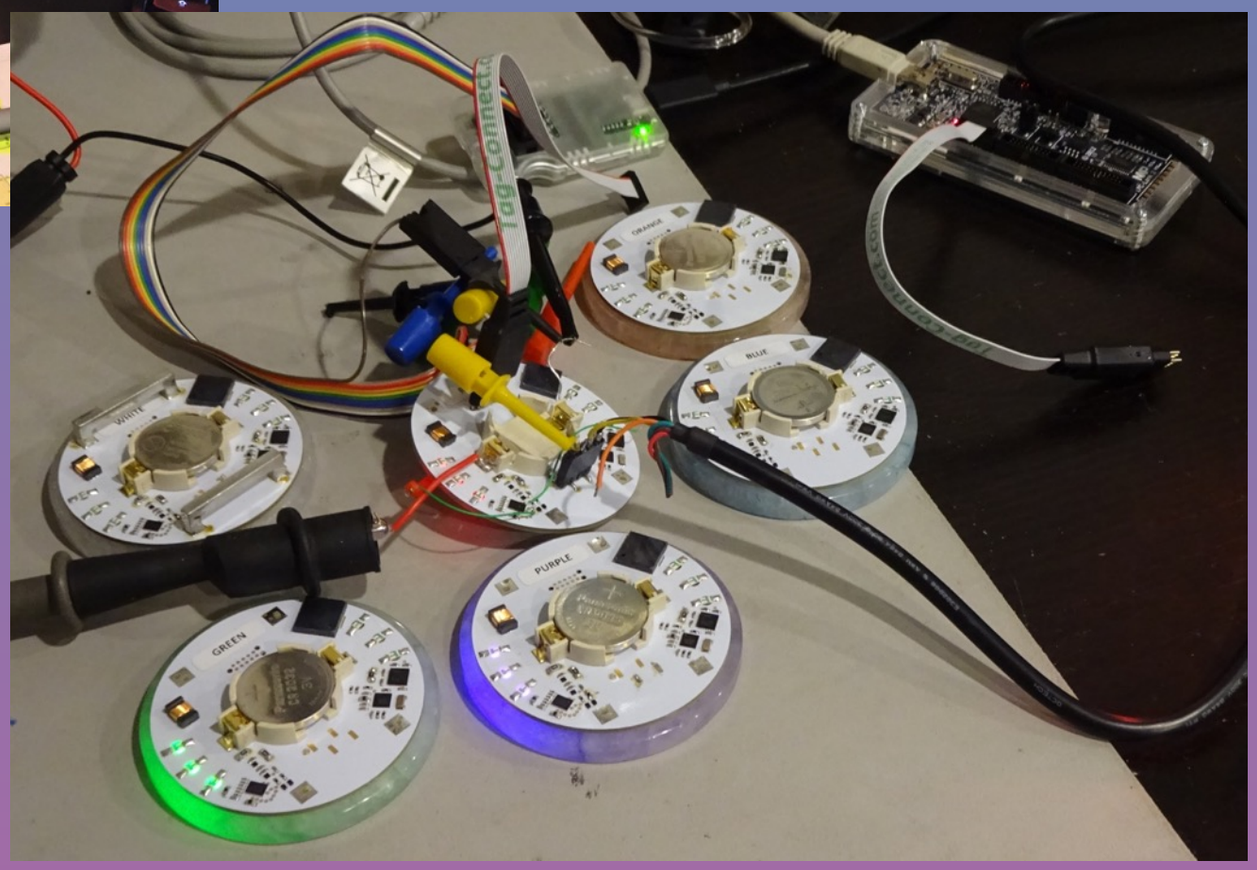

HUNTING FOR TREASURE

- ADVENTURES AT THE TUCSON GEM SHOW
  - 48 SHOWS OVER TWO WEEKS, ~50K PEOPLE
  - 36 HOURS TO FIND SUPPLIER
  - RETAIL VENDORS / HOTEL ROOMS -> WHOLESALE -> MINE OWNER-> FACTORY



HUNTING FOR TREASURE







GEMSTONE FABRICATION

- HAND CUT QUARTZ CRYSTAL
  - RAW MATERIAL FROM BRAZIL
  - NATURALLY FRACTURED, STRENGTH VARIES
  - DYED COLORS FOR NON-HUMAN BADGES
  - CRAFTED BY YEE ON GEMS & JEWELLERY







GEMSTONE FABRICATION







GEMSTONE FABRICATION



GEMSTONE FABRICATION







GEMSTONE FABRICATION







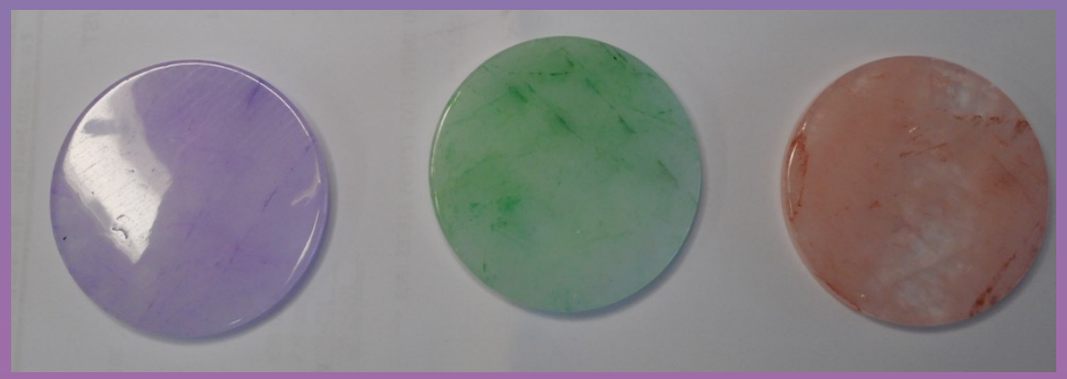

FIRMWARE

- 85% OF FLASH (56KB), 33% OF RAM (5.3KB)
- ~3K PHYSICAL SOURCE LINES OF CODE IN DC27_BADGE.C (MAIN)

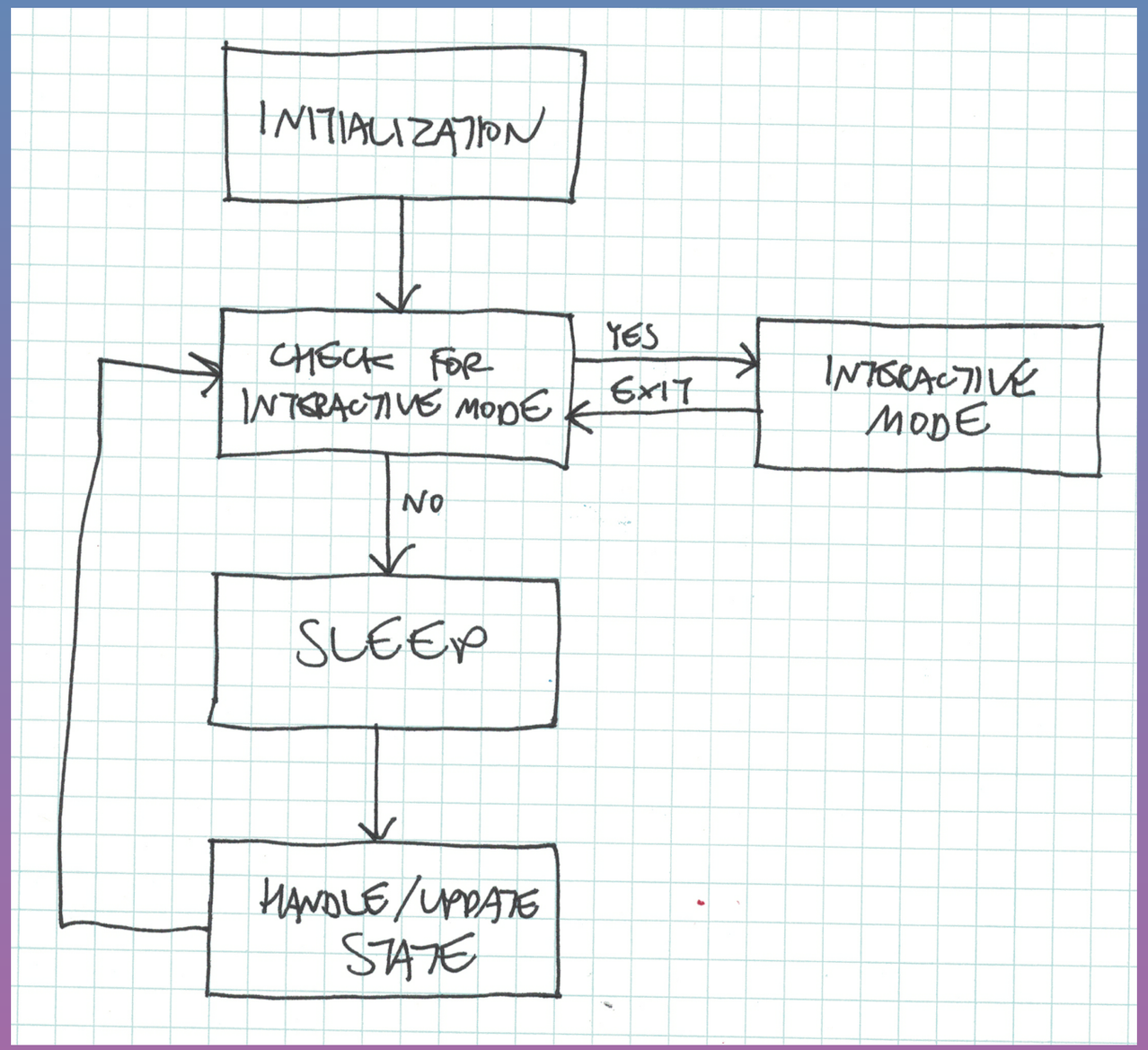

DEVELOPMENT ENVIRONMENT (SW)

- NXP MCUXPRESSO IDE 10.2.1
- FRDM-KL27Z SDK 2.4.1

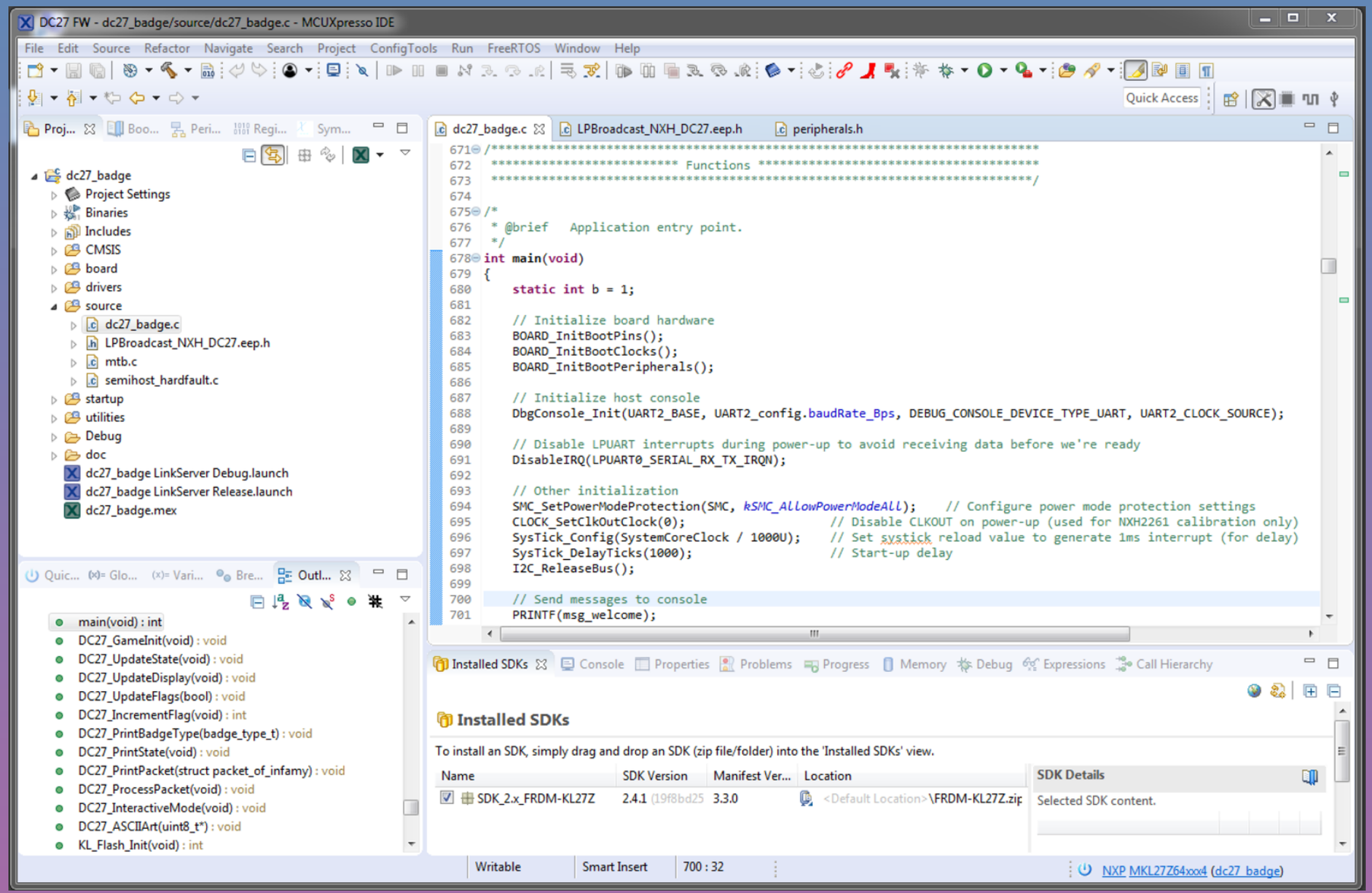

DEVELOPMENT ENVIRONMENT (HW)

- SWD (ARM SERIAL WIRE DEBUG)
  - NXP LPC-LINK2
  - TAG-CONNECT TC2050-IDC-NL-050-ALL (NORMAL ORIENTATION)
    - TRIM ALIGNMENT PINS IF USING W/ MOUNTED GEMSTONE
- VTREF PROVIDES 1.8V I/O LEVEL TO DEBUG PROBE

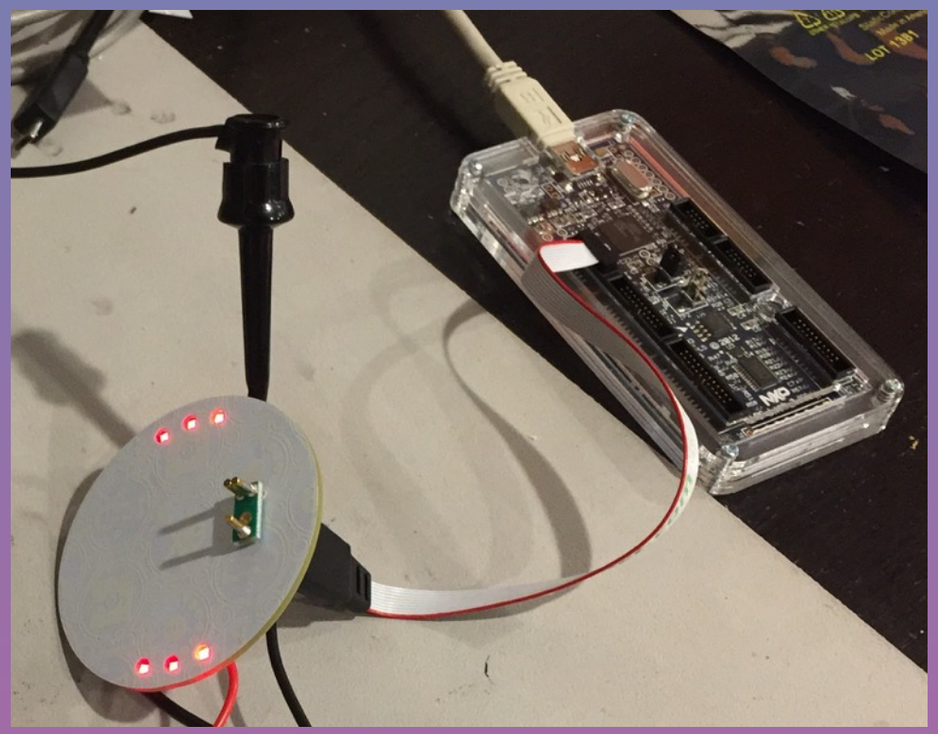

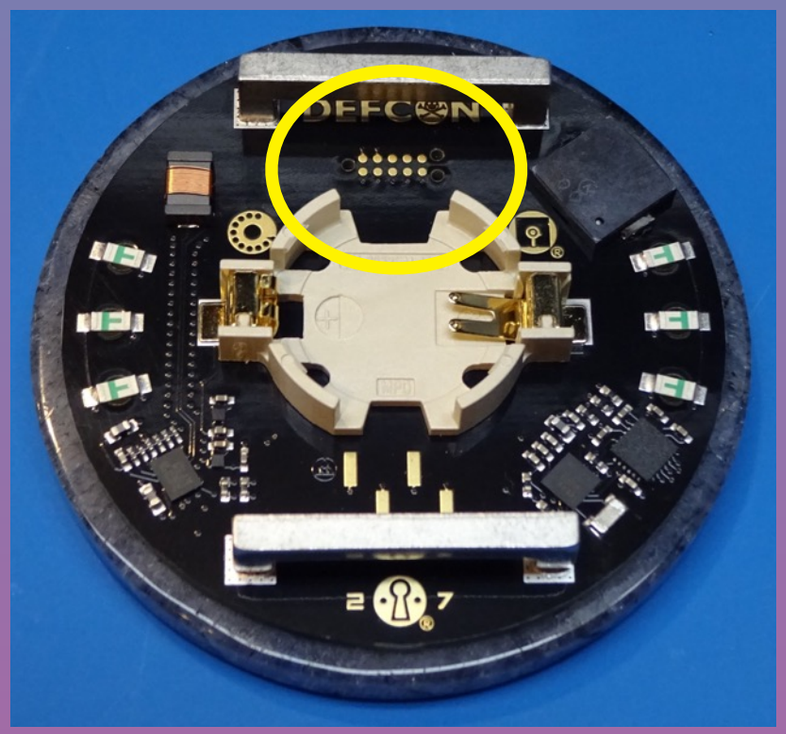

DEVELOPMENT ENVIRONMENT (HW)

- UART
  - 1.8V @ 115200, 8N1
  - DEBUG OUTPUT / SYSTEM STATUS
  - COMMAND-BASED INTERACTIVE MODE
    - WILL ENTER AUTOMATICALLY IF RX LINE IS PULLED HIGH
    - MUST EXIT W/ CTRL-X

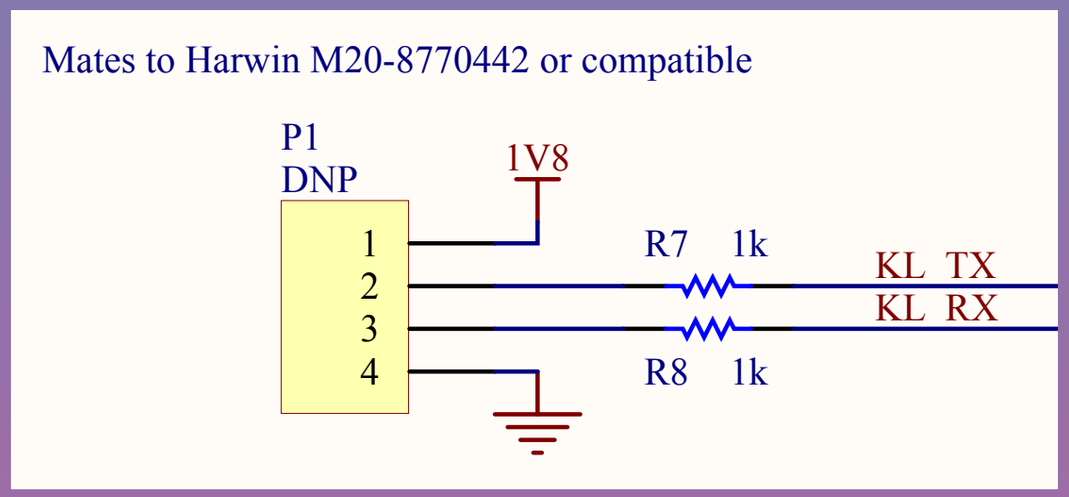

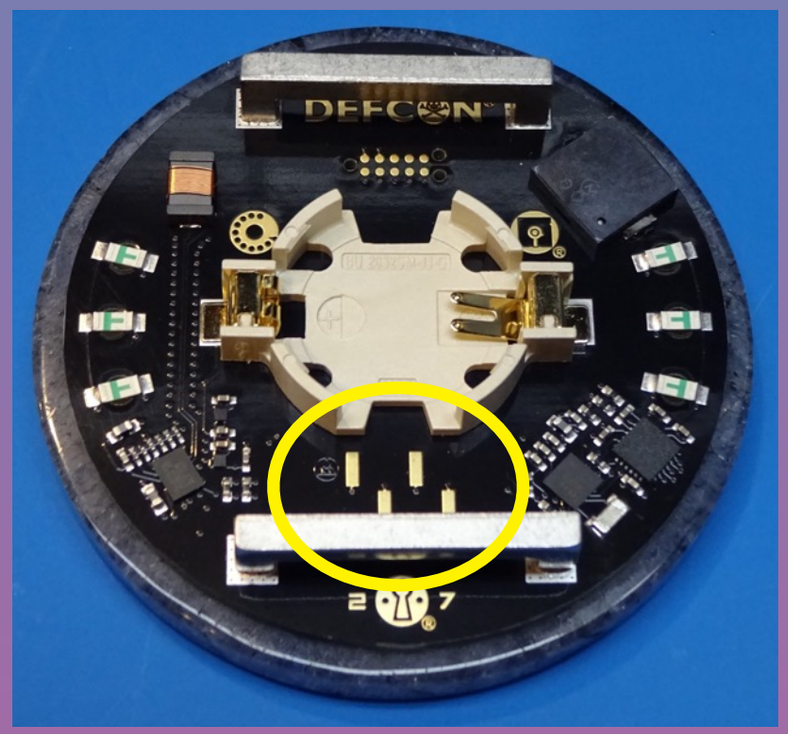

PCB FABRICATION



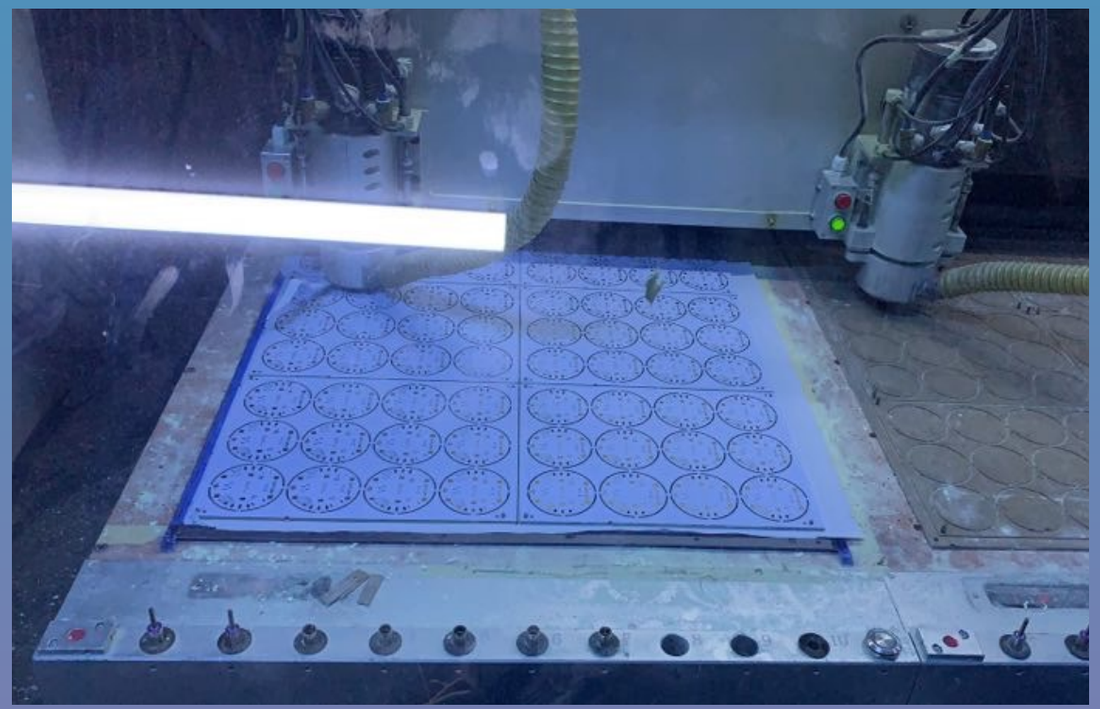





PCB ASSEMBLY



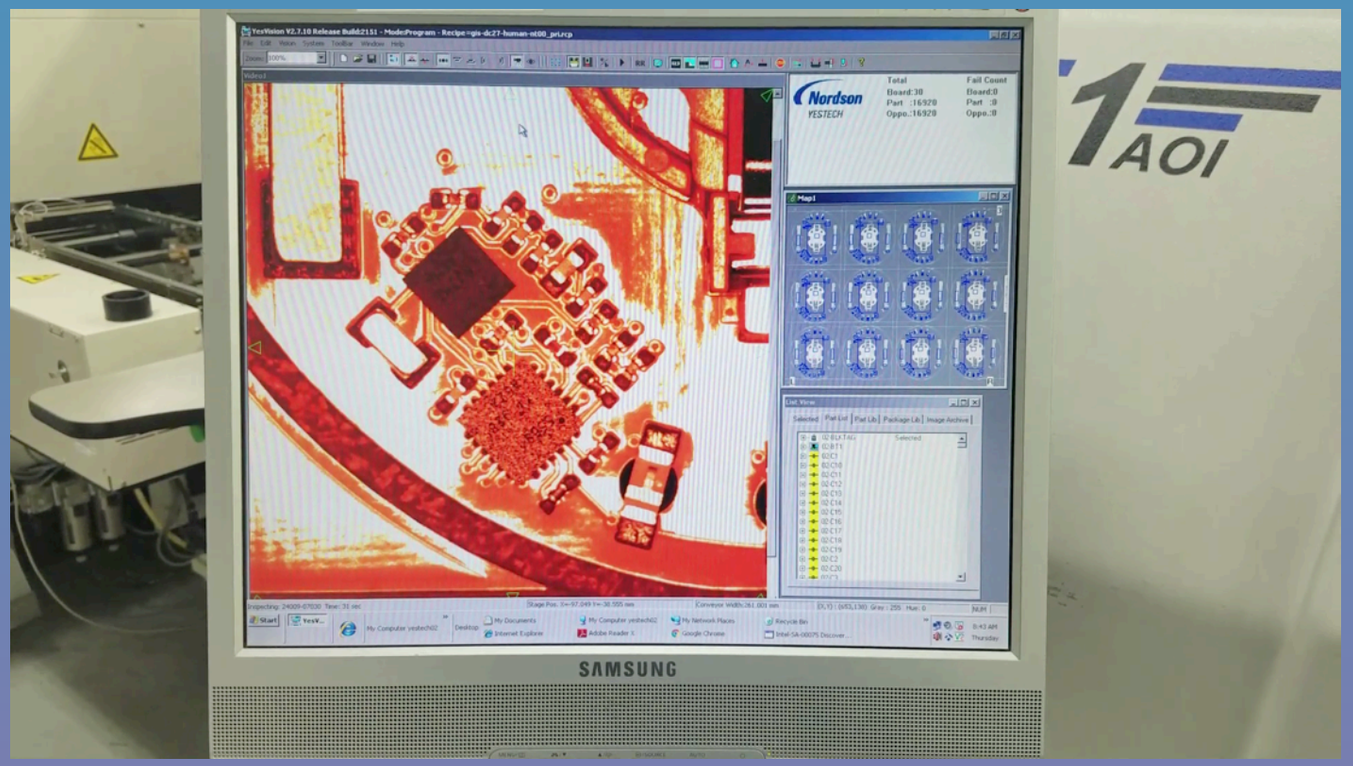

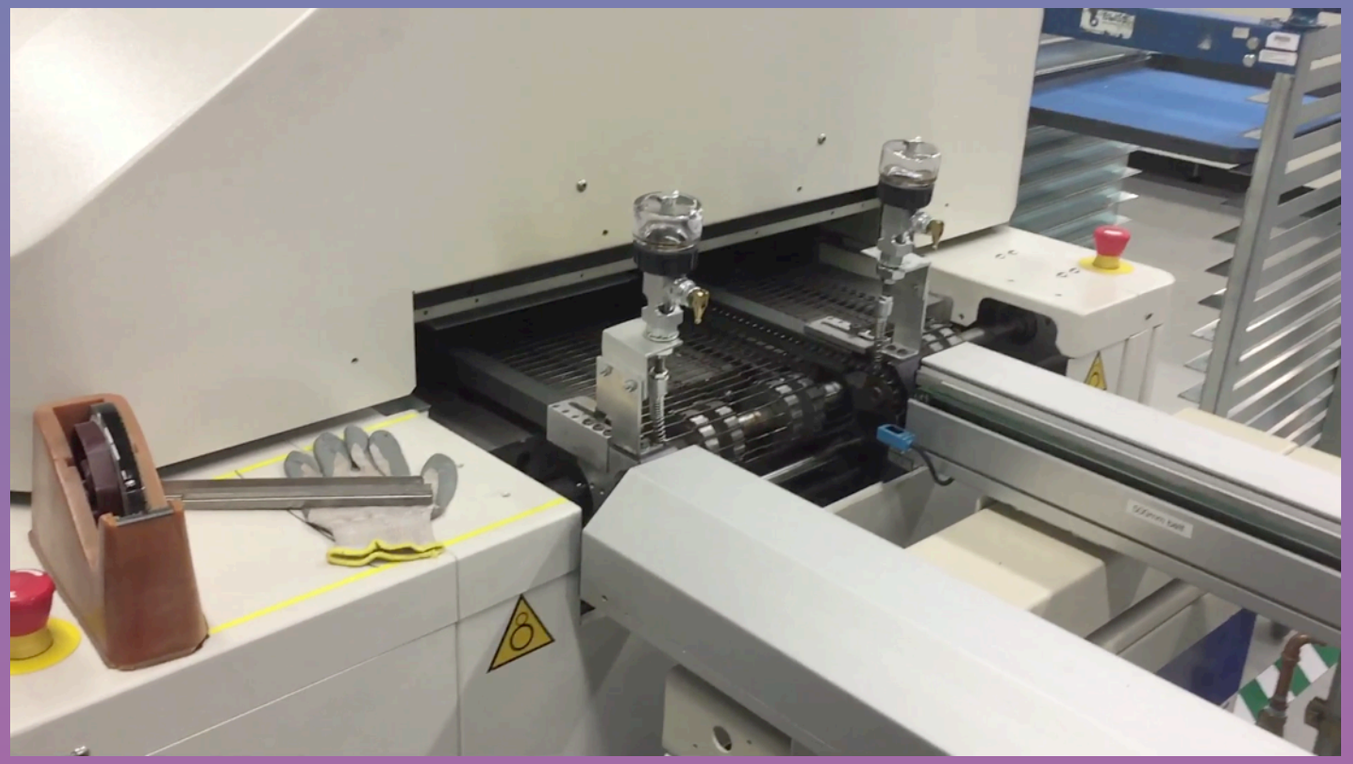

X-RAY

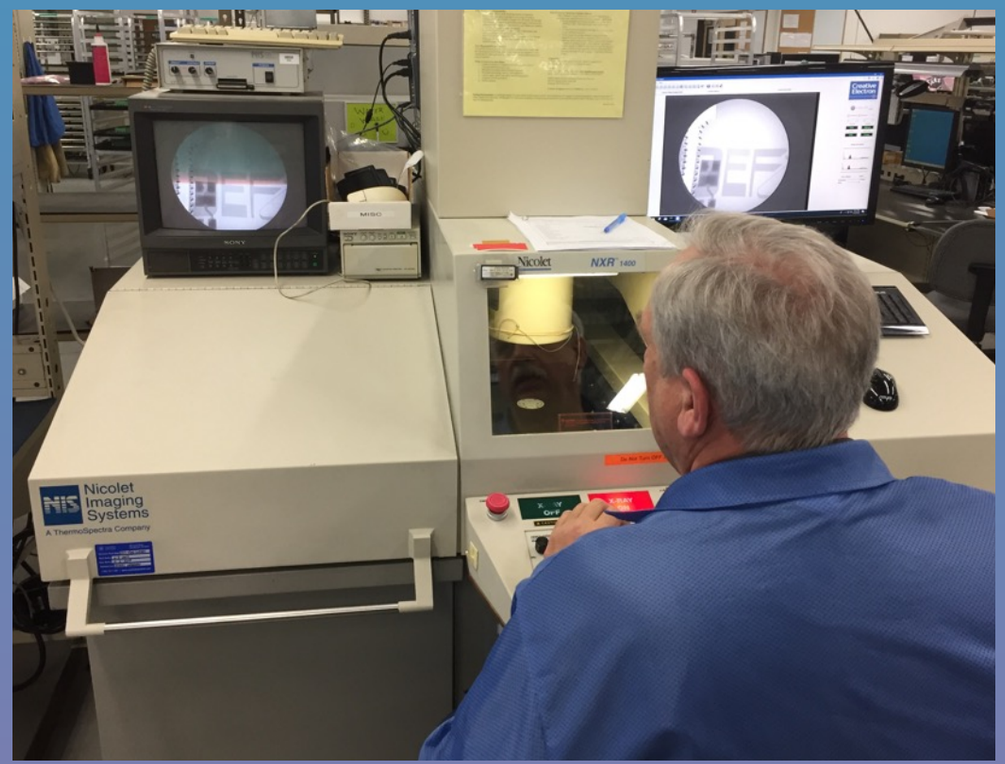
Nicolet
Imaging
Systems
A ThermoSpectra Company
Nicolet
NXR 1400

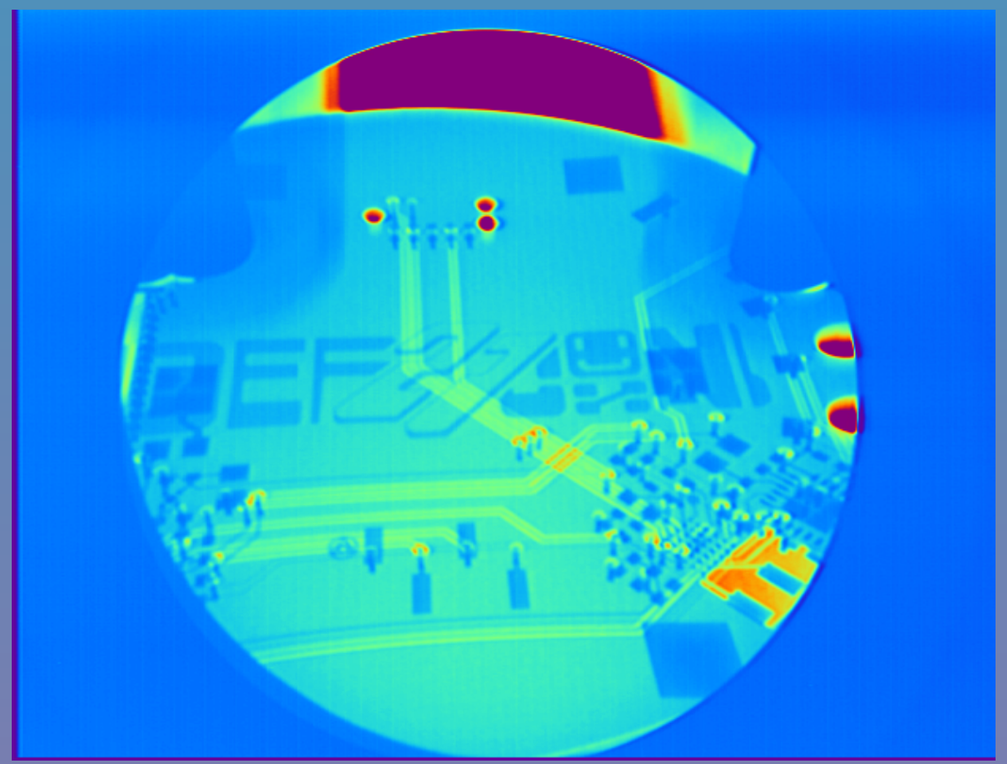

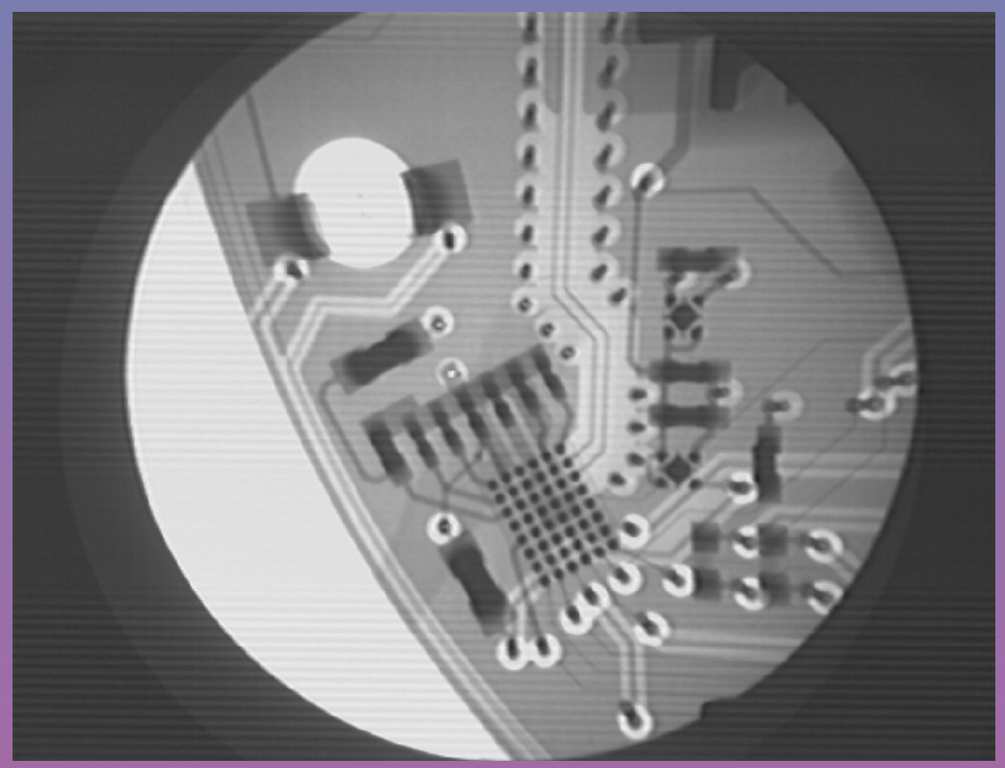

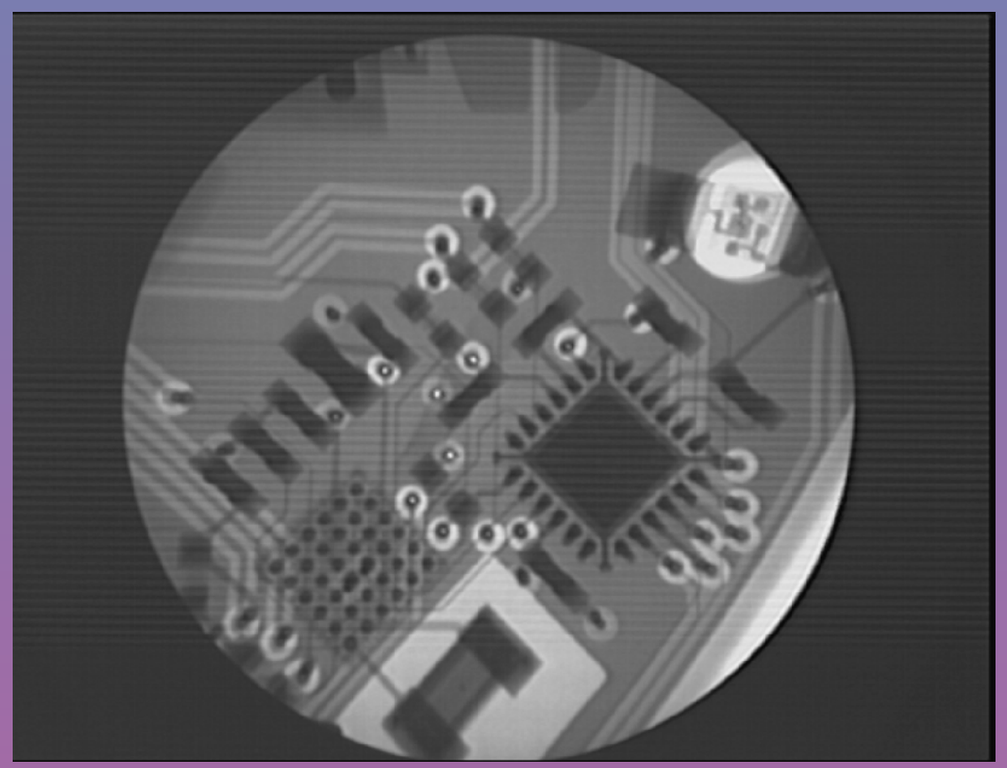

PROGRAMMING / TESTING

- WINDOWS W/ MCUXPRESSO + LPC-LINK2
  - CMD SCRIPT TO PROGRAM KL27
- POWER ON SELF TEST
  - INSPECTION OF LEDS (VISIBLE) AND PIEZO (AUDIBLE)
  - DETECTION / CONFIGURATION OF NXH2261 + LP5569

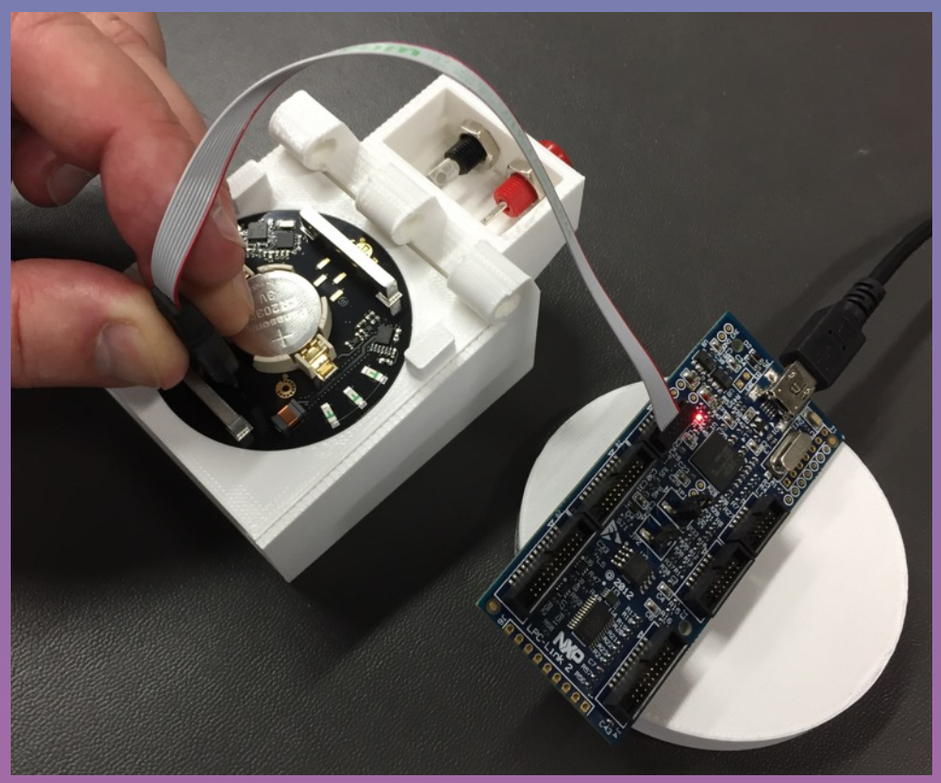

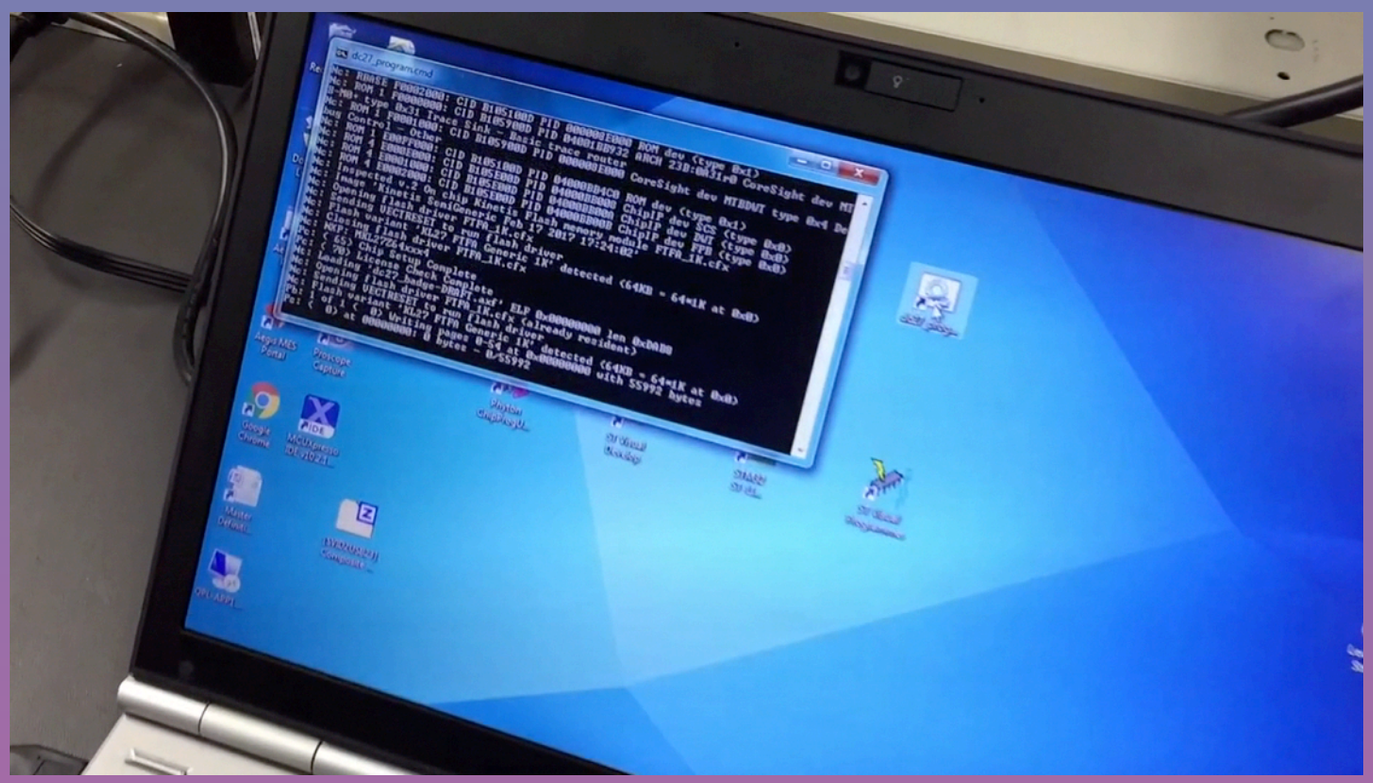

FINAL ASSEMBLY



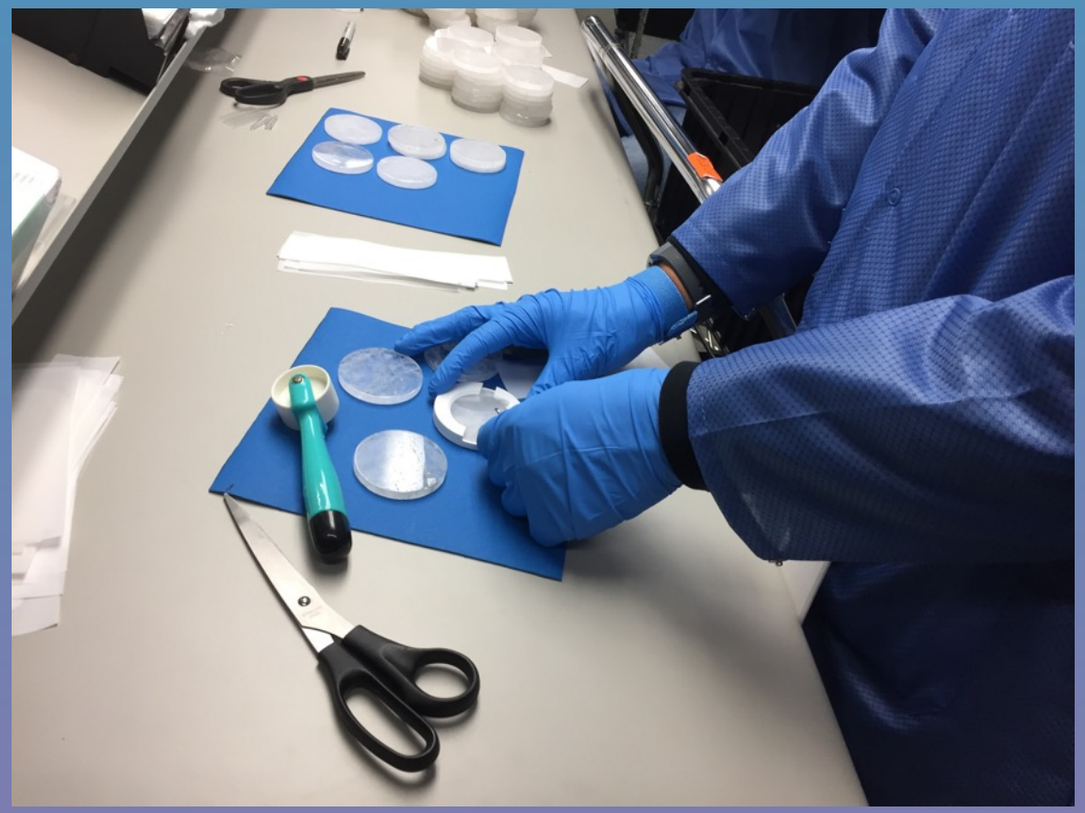

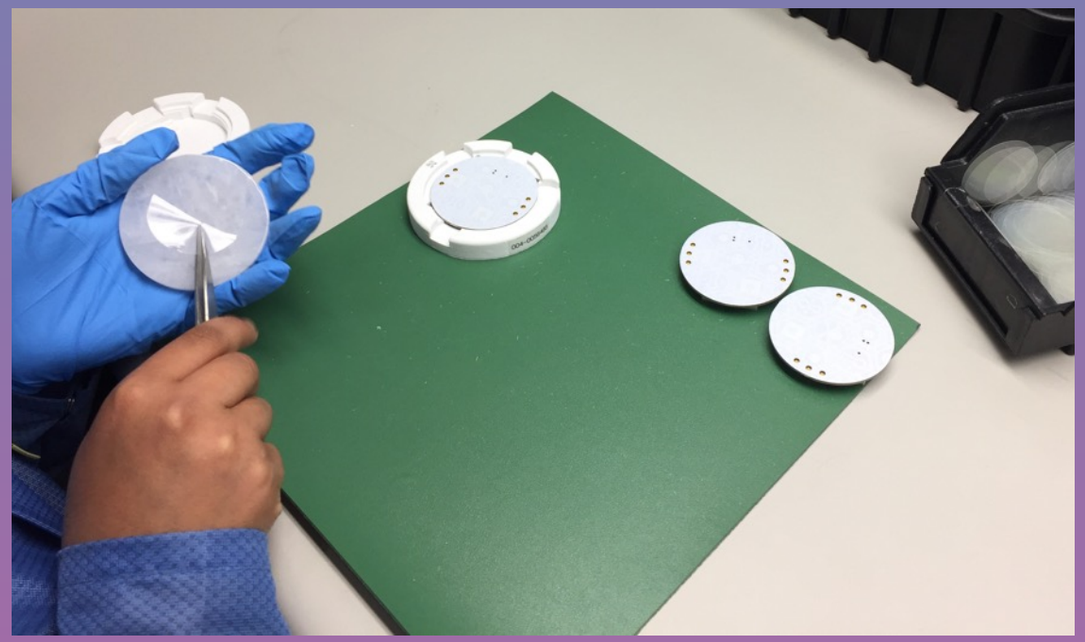

NUMBERS

- HUMAN, WHITE: 26,500
- GOON, RED: 550
- SPEAKER, BLUE: 375
- VENDOR, PURPLE: 250
- PRESS, GREEN: 250
- VILLAGE, ORANGE: 250
- CONTEST, YELLOW: 250
- ARTIST, LIGHT BLUE: 100
- CFP REVIEW, GREY: 45
- UBER, BLACK: 20



(BEFORE GEMSTONE ATTACHMENT)

CHALLENGES / INSIGHTS

- TIME FRAME
- COMMUNICATION W/ PCB FAB
- USING UNFAMILIAR TECHNOLOGIES / NON-STANDARD MATERIALS
- BREAK PROJECT INTO SMALL BITES
- ALL PROBLEMS HAVE A ROOT CAUSE

BATTERY LIFE

- CR2032 3V LITHIUM COIN CELL
  - 225MAH TO 2V
- POWER UP: 4.2MA
- ATTRACT MODE: 2.3 - 4.6MA
- SLEEP MODE (NFMI ENABLED)
  - 0.41 - 2.0MA
  - 0.61MA AVERAGE

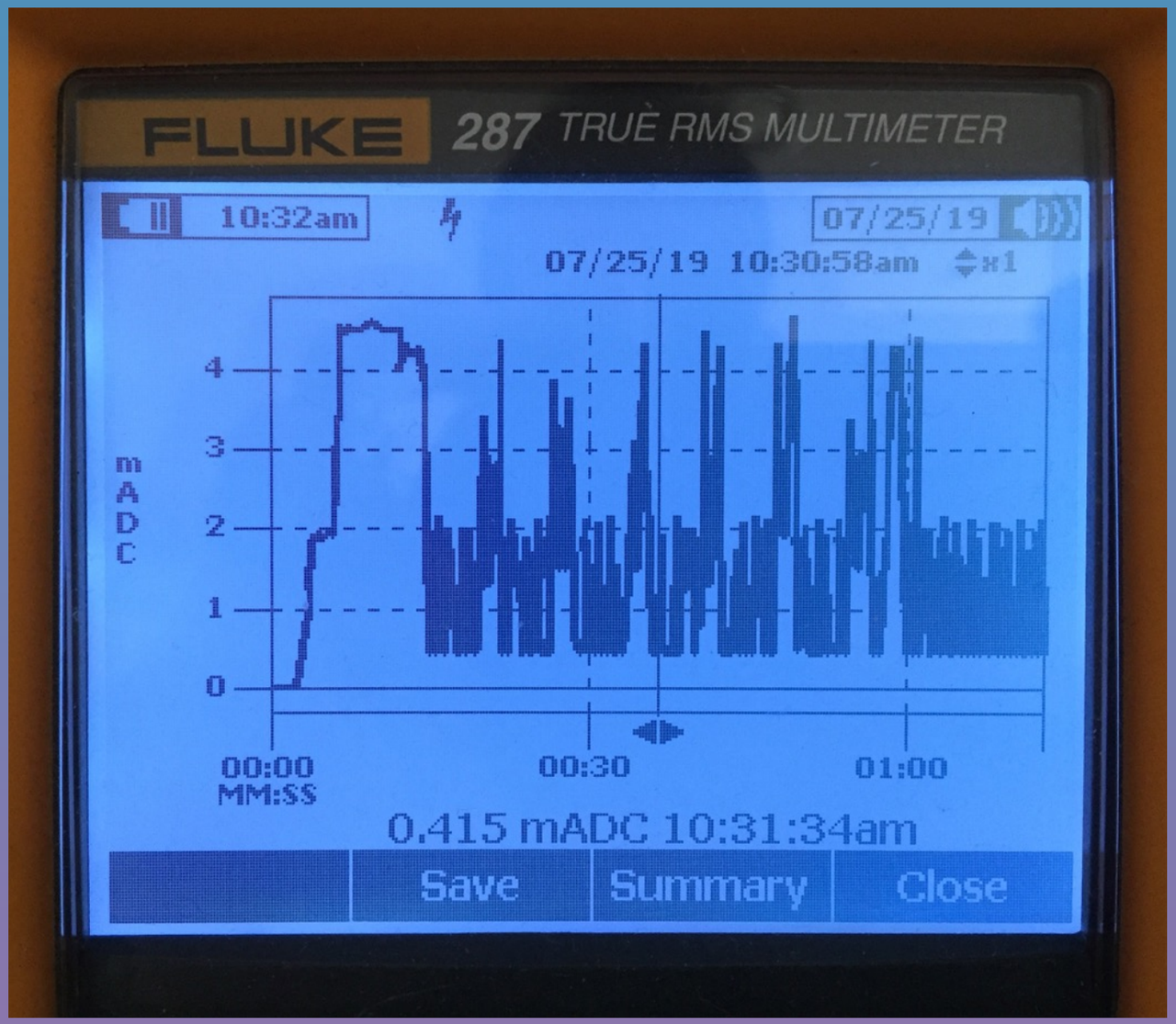

- MINIMUM DESIRED LIFE = 4 DAYS (96 HOURS) -> 2.3MAH AVERAGE

FUTURE USE

- DATA TRANSFER
  - COVERT MESSAGE PASSING (NO RF SIGNATURE)
  - ROBOTICS (LOCATION TRACKING / SENSING)
- BLINKENLIGHTS
- GENERAL PURPOSE ARM DEV. ENVIRONMENT
- ???

A GLOBAL EFFORT

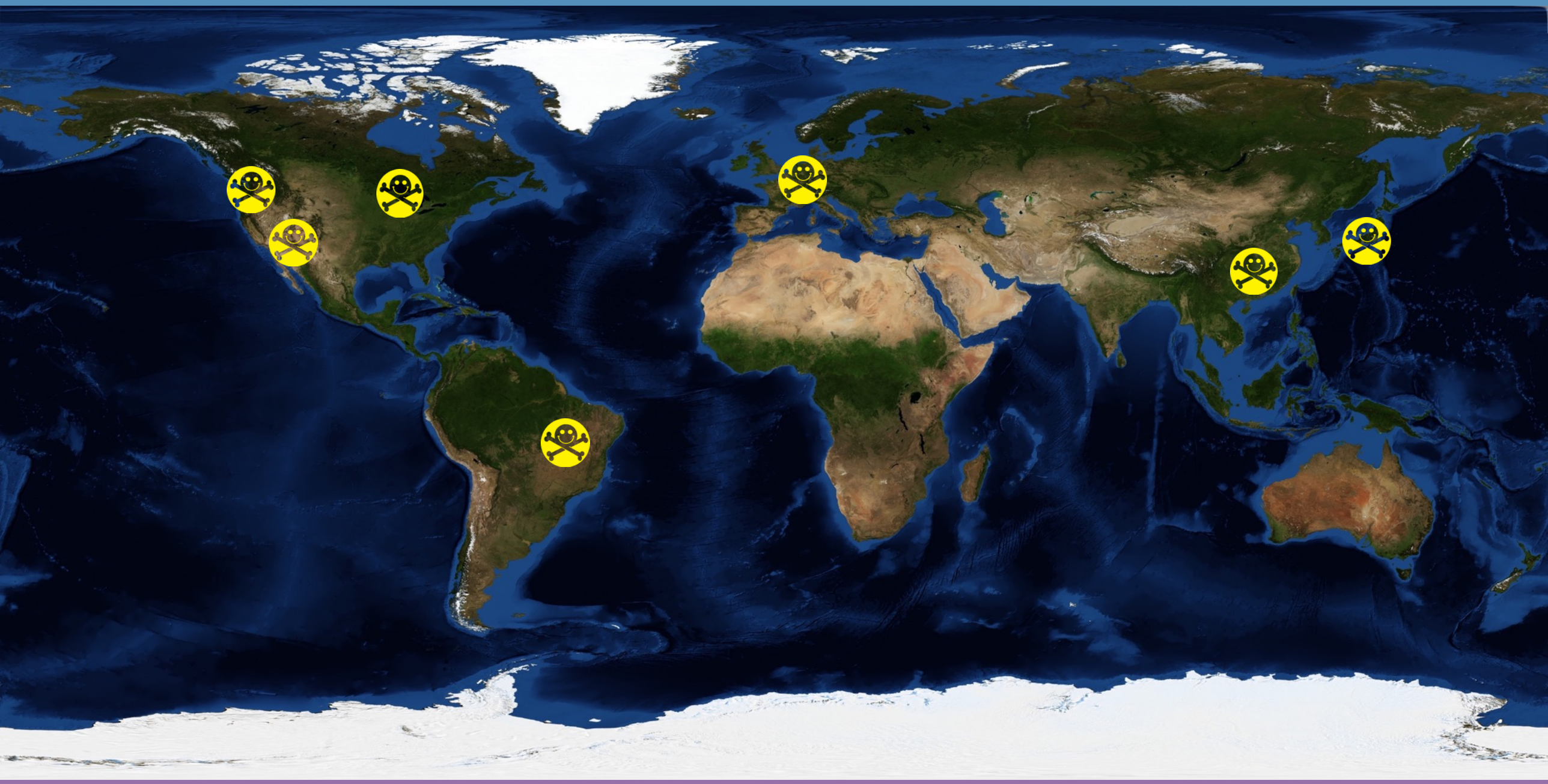

BLUE MARBLE, RETO STÖCKLI, NASA EARTH OBSERVATORY

RESOURCES

- DC27 HARDWARE HACKING VILLAGE (HHV)
  - EXTRA MATERIALS (GEMSTONES, COMPONENTS, BATTERIES)
  - REAL-LIFE ENGINEER FROM NXP
- DESIGN DOCUMENTATION, CODE, ETC.
  - www.grandideastudio.com/portfolio/defcon-27-badge/

ENJOY THE CON!

@JOEGRAND | WWW.GRANDIDEASTUDIO.COM