MIDNIGHT BLUE

August 2023

TETRA TOUR DE FORCE

Jailbreaking digital radios and base stations for fun and secrets

By Midnight Blue

sales@midnightblue.nl // midnightblue.nl // All Right Reserved

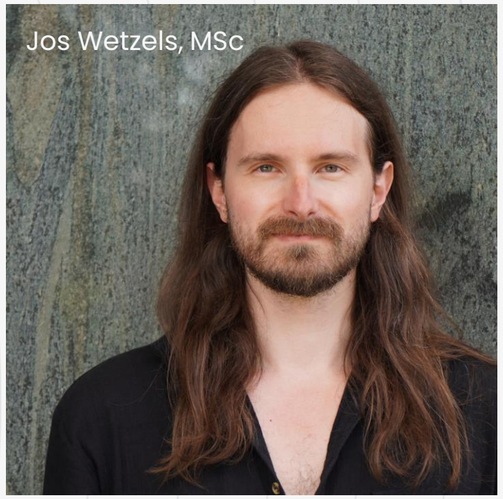





Midnight Blue

FCA
PSA

BlackBerry
QNX

MIFARE Classic

Selected Research

What is TETRA?

- Globally used radio technology
  - Competes with P25, DMR, TETRAPOL
- Standardized in 1995 by ETSI
  - Known for GSM, 3G/4G/5G, GMR, etc.
- Used for voice & data communications incl. machine-to-machine
- Relies on secret, proprietary cryptography





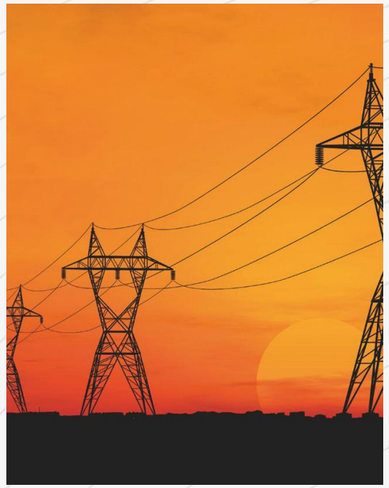

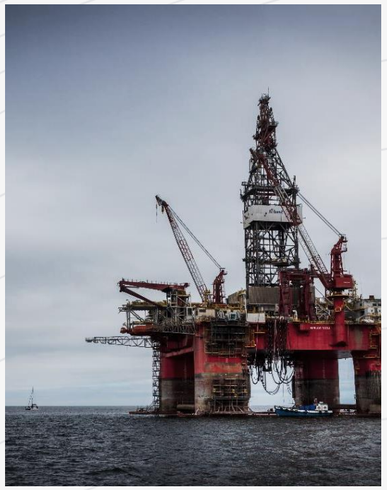

 All Right Reserved

Use by police



Vast majority of global police forces use TETRA radio technology.

- C2000 (NL)
- ASTRID (BE)
- BOSNET (DE)
- AIRWAVE (UK)
- Nødnett (NO)
- Rakel (SE)
- SINE (DK)
- VIRVE (FI)
- SIRESP (PT)
- …

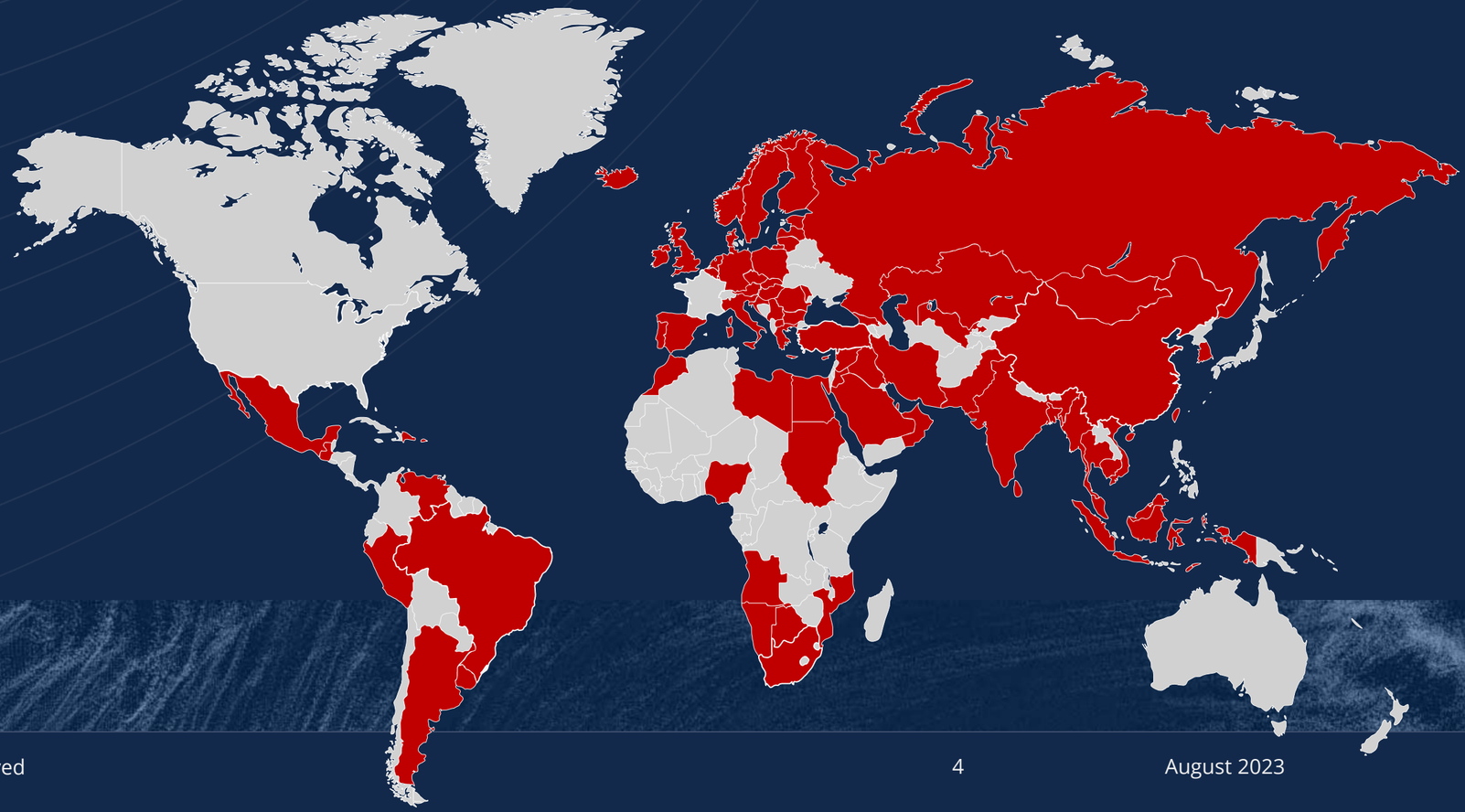

Based on OSINT

Military & Intelligence



Many countries have one or more military or intelligence units using TETRA radio technology as primary, fallback, or interfacing comms.

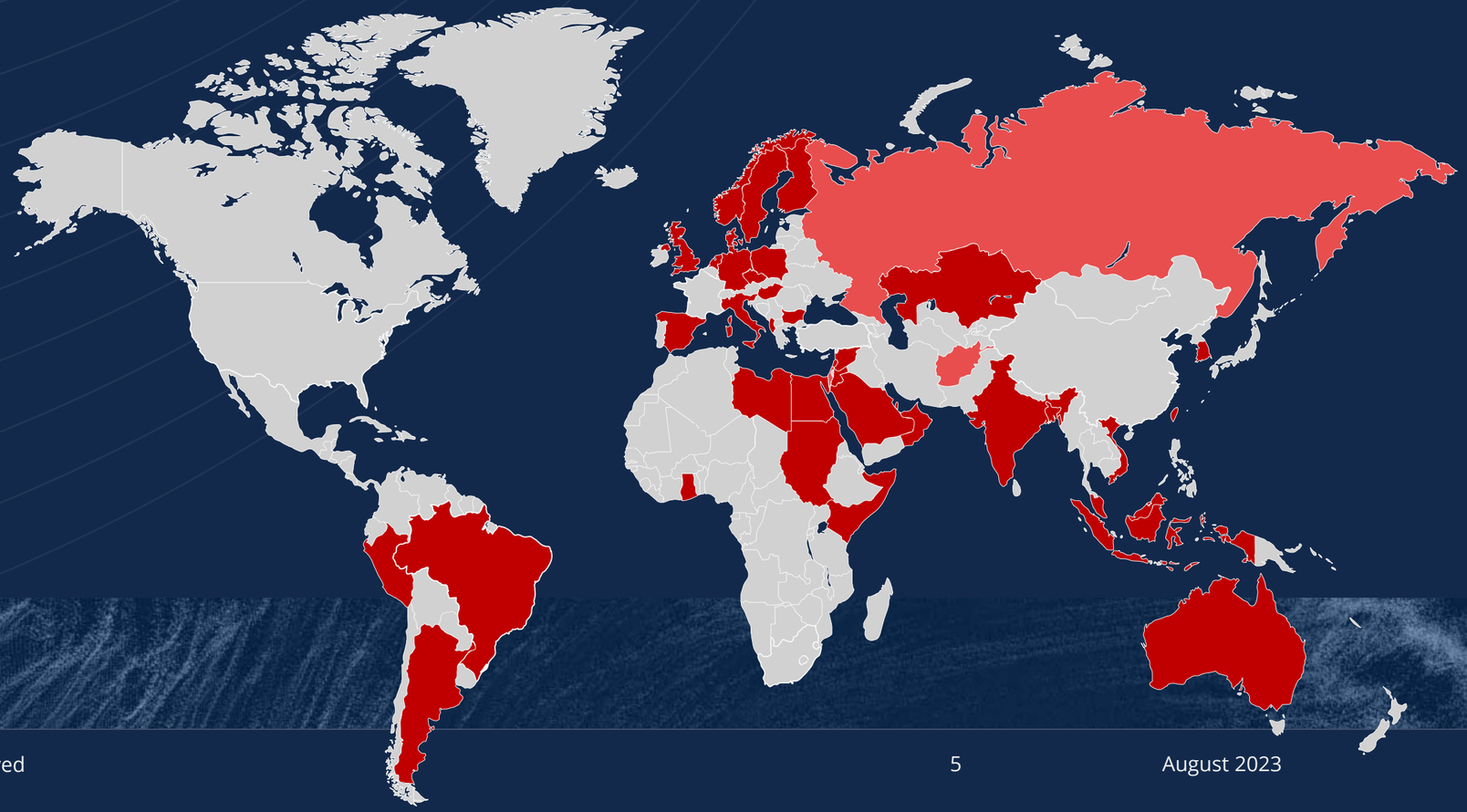

Based on OSINT

Critical Infrastructure



Many parties such as airports, harbors, and train stations use TETRA for voice communications.

In addition TETRA is used for SCADA WAN, such as substation & pipeline control, or railway signalling.

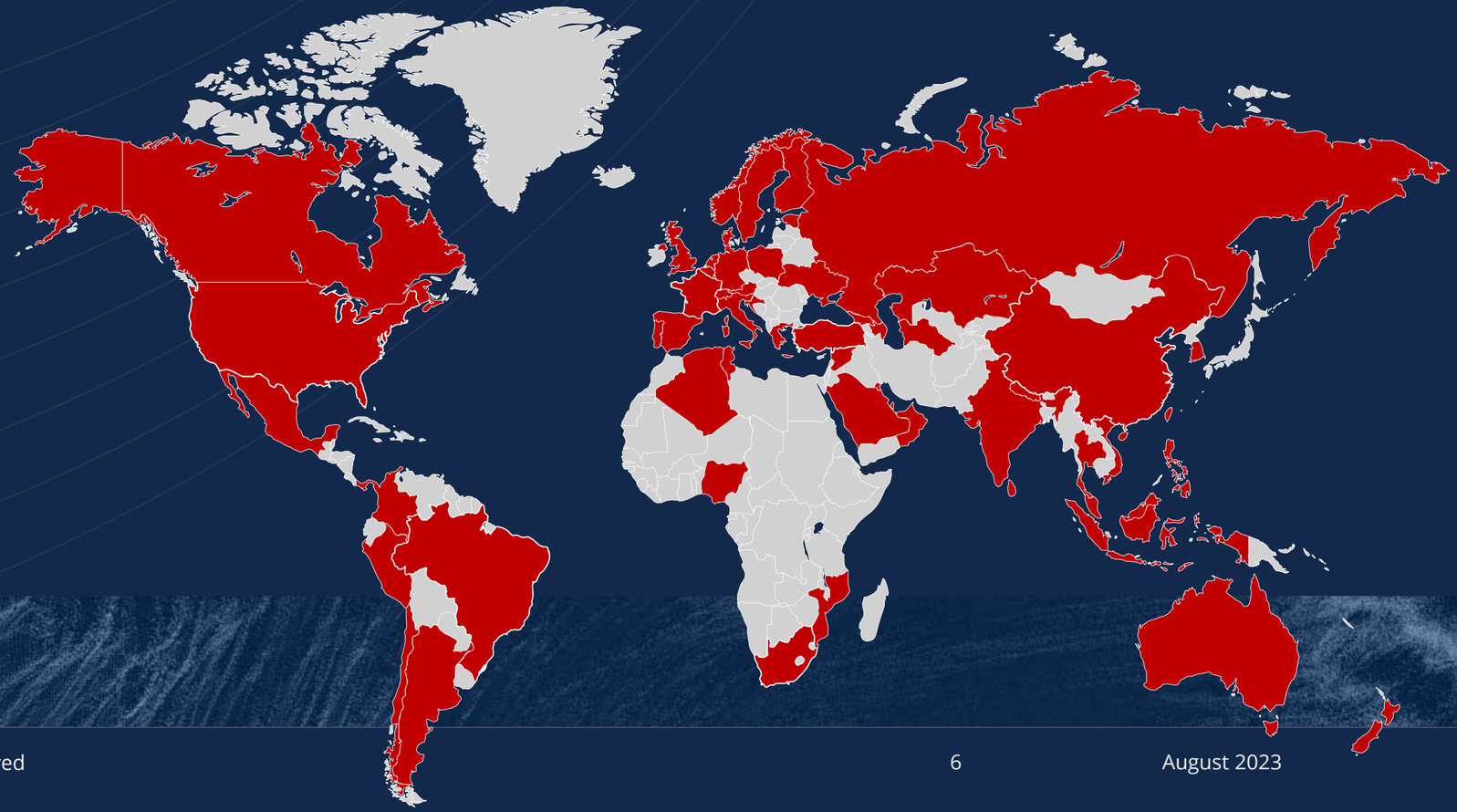

Based on OSINT

Open standard?

- Public standard, secret crypto
  - NDAs, only available for ‘bona fide’ parties
- Manufacturers must protect algorithms
  - Hardware, or, implementations
  - Software with extraction countermeasures

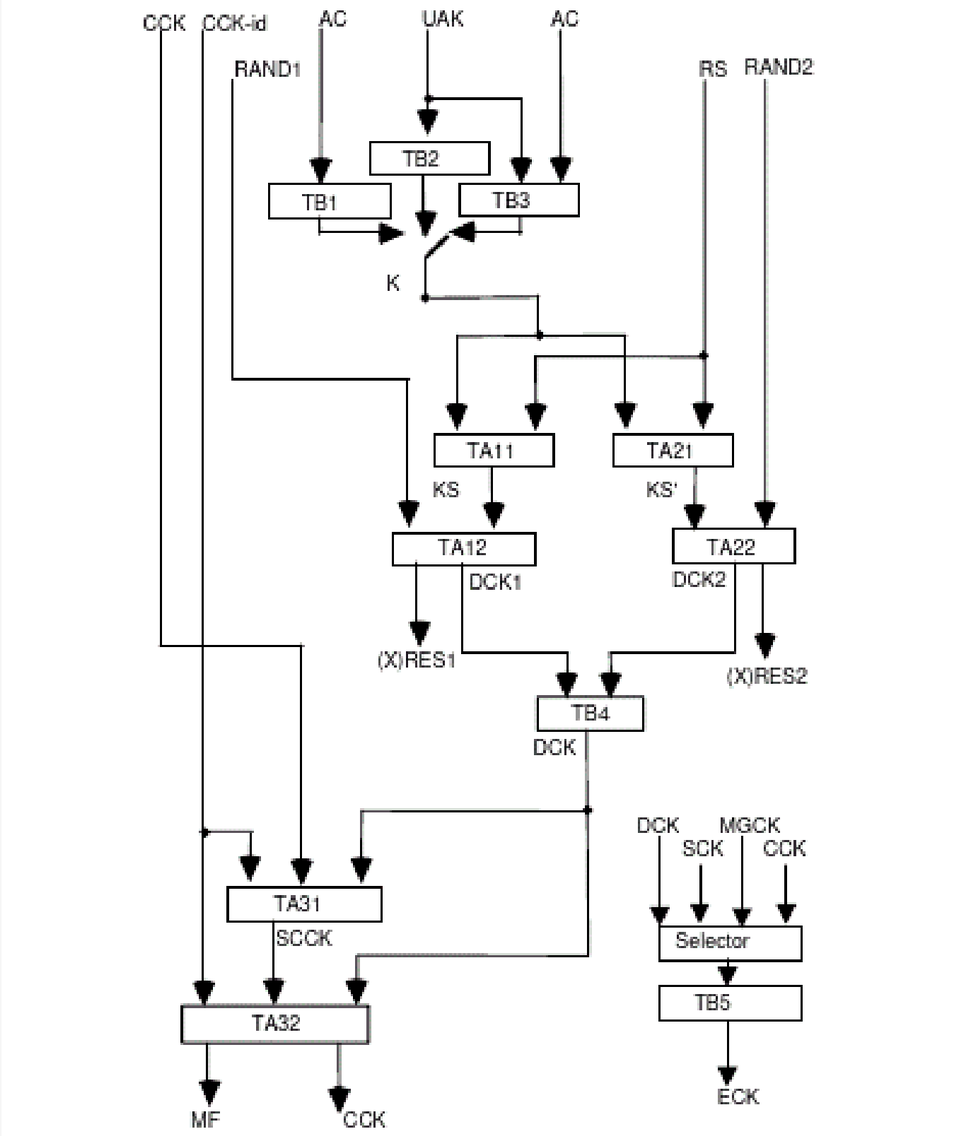

ıre B.1: Overview of air interface authentication and key management (sheet 1

Lots of ‘bona fide’ vendors

Significant amount of geographically dispersed players

Top-tier adversaries likely have specs (e.g. via in-country manufacturers or theft)

Historical M&As

Teltronic, Simoco → Sepura, Nokia → Airbus, Rohde & Schwarz, PowerTrunk → Hytera, Selex ES → Leonardo, Chelton → Cobham, Artevea → dissolved.

TETRA security

- **TAA1 suite**
  - Authentication, key management / distribution (OTAR)
  - Identity encryption
  - Remote disable

- **TEA (TETRA Encryption Algorithm) suite**
  - Voice and data encryption (Air Interface Encryption (AIE))
    - **TEA1: Readily exportable**
    - **TEA2: European public safety**
    - **TEA3: Extra-European public safety**
    - **TEA4: Readily exportable (hardly used)**
  - Not to be confused with Tiny Encryption Algorithm!

Optional: end-to-end



- **Only used by some countries, usually for special cases only**
- **Not inside TETRA standard**
  - Some guidelines / integrations are provided
- **Proprietary solution on top of AIE**
  - Expensive
- **Again, very opaque…**
  - High-level specification but no detail

Project RE:TETRA

midnightblue.nl/retetra

 All Right Reserved

Kerckhoffs' principle

"A cryptosystem should be secure even if everything about the system, except the key, is public knowledge."

-Auguste Kerckhoffs, 1883

Violators don’t fare well

- A5/1, A5/2 (GSM), COMP128 (GSM)
- GMR-1, GMR-2 (SATPHONES)
- GEA-1, GEA-2 (GPRS)
- DSAA, DSC (DECT)
- MIFARE (RFID)
- HITAG (RFID)
- MEGAMOS (RFID)
- DST (RFID)
- Legic (RFID)
- CSS (DVD)
- CryptoAG / Hagelin

- Orange = backdoored

 All Right Reserved

~~Kerckhoffs' principle~~ ETSI's principle

"Well [obscurity is] also a way of maintaining security."*

-Brian Murgatroyd, Chairman ETSI TC TETRA, 2023

* Interview between Kim Zetter and Brian Murgatroyd, Chair of ETSI TC TETRA
https://zetter.substack.com/p/interview-with-the-etsi-standards

Project motivation

- Proprietary cryptography has repeatedly suffered from practically exploitable flaws which remain unaddressed until disclosed

- GOAL: open up TETRA for public review after 20+ years
  - Enables informed risk analysis
  - Resolve issues
  - Level playing field

- Funded by NLnet
  - NPO funding open IT projects

Let’s break open a radio!

 All Right Reserved

Selecting a target

- **Wide variety of:**
  - Brands
  - Models
  - Architectures
- **We need to pick well**
  - Wrong choice wastes lot of time







Vendor	Baseband/fam	Stds	IC	Arch MCU/DSP	Sec
Motorola	Patriot	DMR P25	DSP566xx	MCORE / DSP56600	HW
Motorola	Redcap2	-	DSP566xx	MCORE / DSP56652	HW
Motorola	Freon	DMR P25	OMAP-L138	ARM / TMS320C674x	TEE
Hytera	-	DMR	OMAP5912ZZG	ARM / TMS320C55x	FPGA
Sepura	GEN3 CastleCombe	-	OMAP-L138	ARM / TMS320C674x	HW
Leonardo	Leonardo / SELEX	-	OMAP 3730	ARM / TMS320C64x	?

Vendor	Baseband/fam	Stds	IC	Arch MCU/DSP	Sec
Motorola	Patriot	DMR P25	DSP566xx	MCORE / DSP56600	HW
Motorola	Redcap2	-	DSP566xx	MCORE / DSP56652	HW
Motorola	Freon	DMR P25	OMAP-L138	ARM / TMS320C674x	TEE
Hytera	-	DMR	OMAP5912ZZG	ARM / TMS320C55x	FPGA
Sepura	GEN3 CastleCombe	-	OMAP-L138	ARM / TMS320C674x	HW
Leonardo	Leonardo / SELEX	-	OMAP 3730	ARM / TMS320C64x	?

Motorola MTM5400

- Common model, easily obtained 2nd hand online
- Baseband SoC by TI
  - So, no hardware TETRA crypto
- SoC has software security features
  - Used for protecting TETRA crypto from extraction?



Architecture

- **Control head**
  - Microphone, keyboard, field configuration
- **Rear connector**
  - Depot programming
- **Baseband**
  - ARM core (high-level stuff)
  - DSP (signals processing)
  - TEE (magic sauce?)

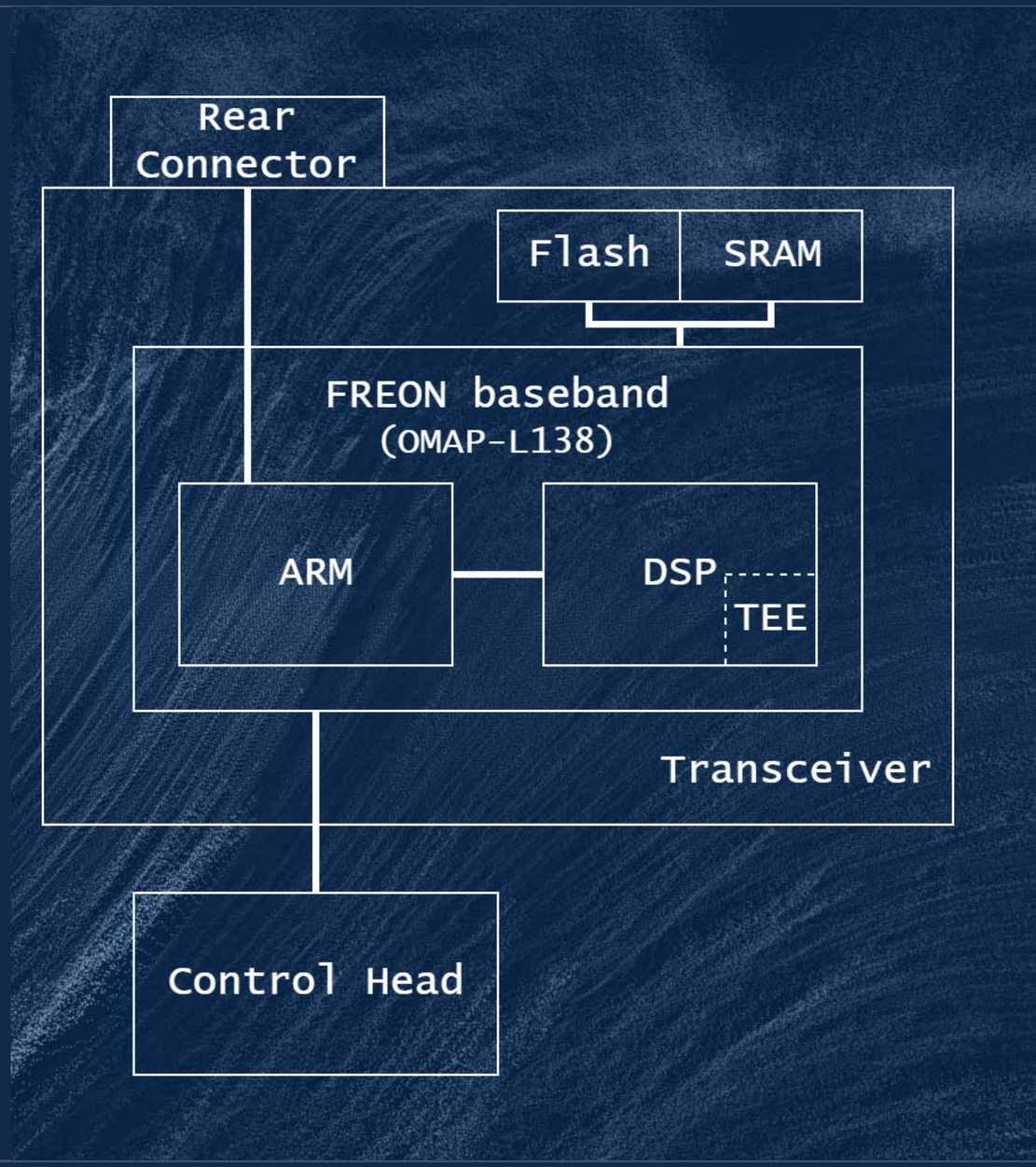

 All Right Reserved

The SoC: OMAP-L138

- Embedded ARM and DSP core
- DSP core is TMS320C674x series architecture
- Very limited reversing tooling available – we built our own
- DSP features secure versus non-secure mode, orthogonal to the more common user versus supervisor modes.

Privilege / Security	Secure	Non-secure
Supervisor	Secure Kernel and Secure Boot Loader	DSP/BIOS or other OS kernels
User	Licensed Algorithms (e.g. WMV, WMA, etc...)	Non-secure Applications or other OS kernels

TI SoC LCDK

- Texas Instruments Low Cost Development Kit
- Non-secure only: security features are disabled ☹
- Useful for reversing, debugging, testing

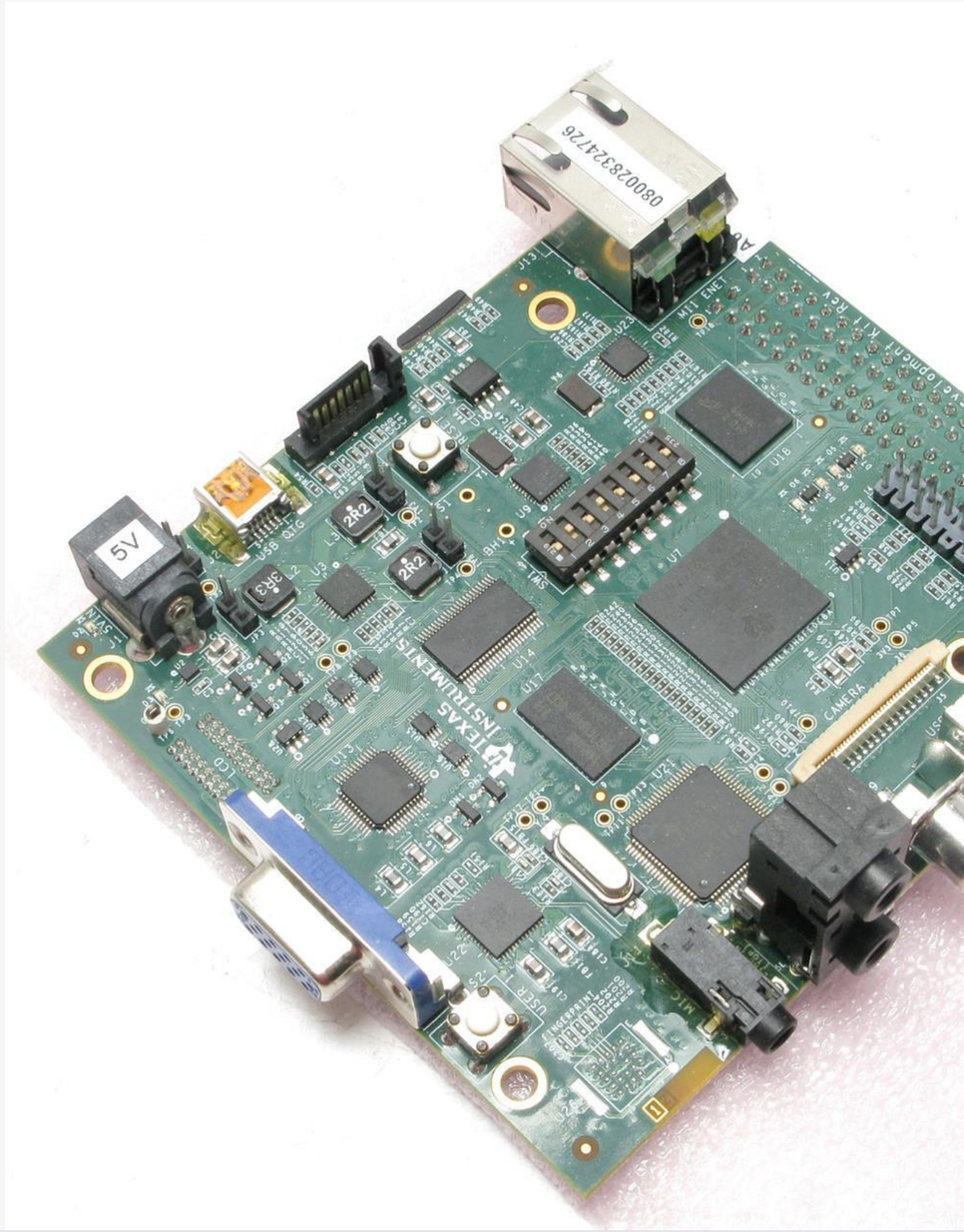

Confirming assumptions

- **Mainboard covered with shields**
  - FCC pic exists, but not readable
  - Need to locate SoC, check if secure variant (TEE)
- ***grabs rotary saw***
- **No surprises** 👍

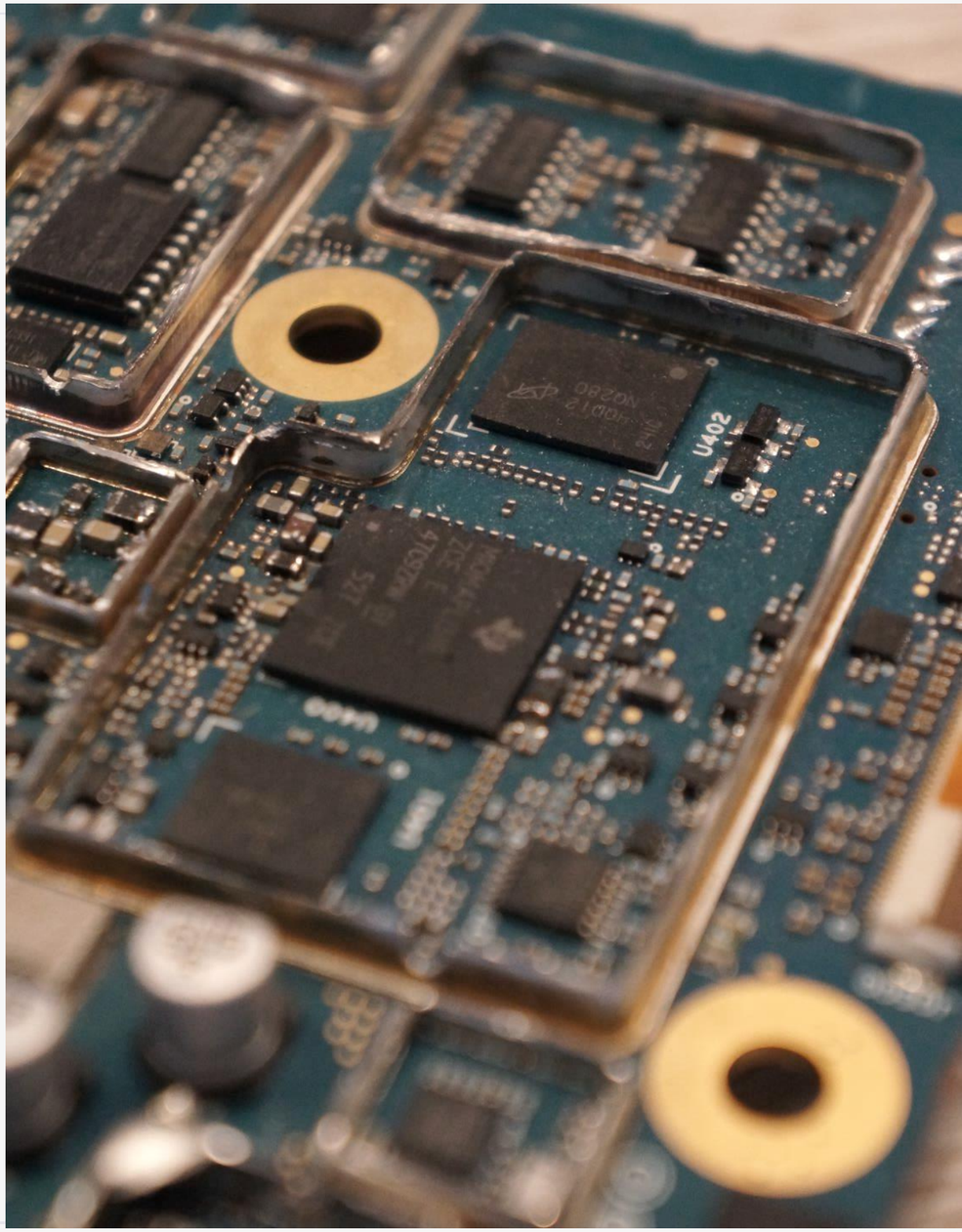

MTM Firmware format

- Shipped in .rpk package

- But how to extract it?

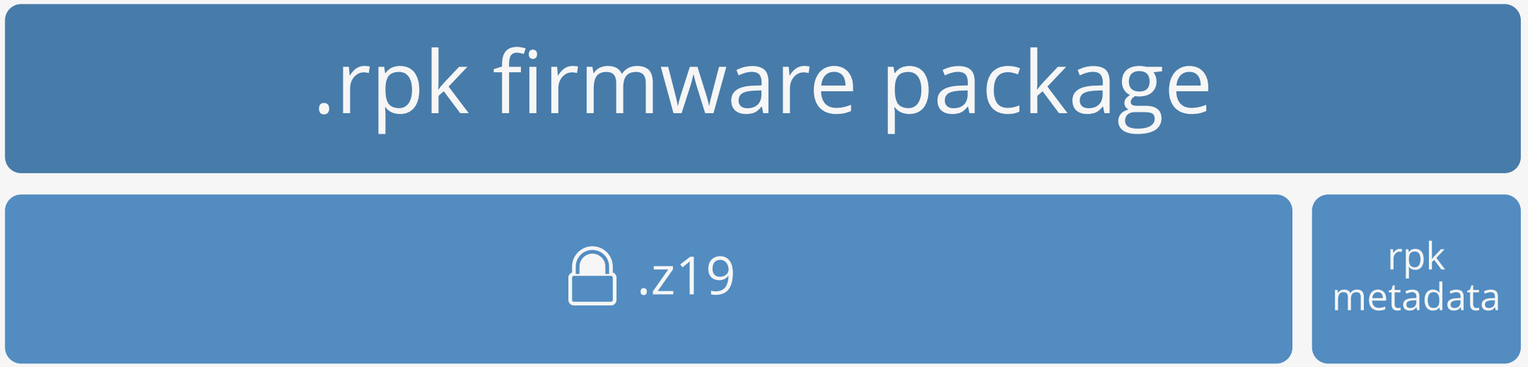

- Zip archive
- Encrypted..

Warmup

- Firmwares are not personalized
  - Has to be a general way to load them
- TetraCPS decrypts files in .rpk
  - … and then files inside that, yet again
- Some light .NET reversing

```
label_16:
            try
            {
              string str;
              switch (0)
              {
                case 0:
label_18:
                  A_0.Password = "[redacted]";
                  str = Path.GetFileName(this.h).ToLowerInvariant();
                  num2 = 5;
                  num1 = num2;
                  goto default;
                default:
                  rv rv;
                  ZipEntry entry;
                  while (true)
                  {
                    switch (num1)
                    {
```

```
public void Open(string path, string tempRootFolder)
{
  Guard.ArgumentNotNullOrEmpty(path, nameof (path));
  this.FilePath = path;
  if (!File.Exists(path))
  {
    this.zipCreater.Open(path);
    this.isNewFile = true;
  }
  else
  {
    this.zipAppender.Open(path);
    this.zipFinder.Open(this.zipAppender);
    this.zipSanner.Open(this.zipAppender);
  }
  this.Password = "[redacted]";
  this.OwnTempFolder = RepoUtil.GetUniqueFolderPath(Path.Combine(tempRootFolder, this.GetHashCode().
  FileSystem.CreateDirectoryIfNotExist(this.OwnTempFolder);
}
```

Firmware format

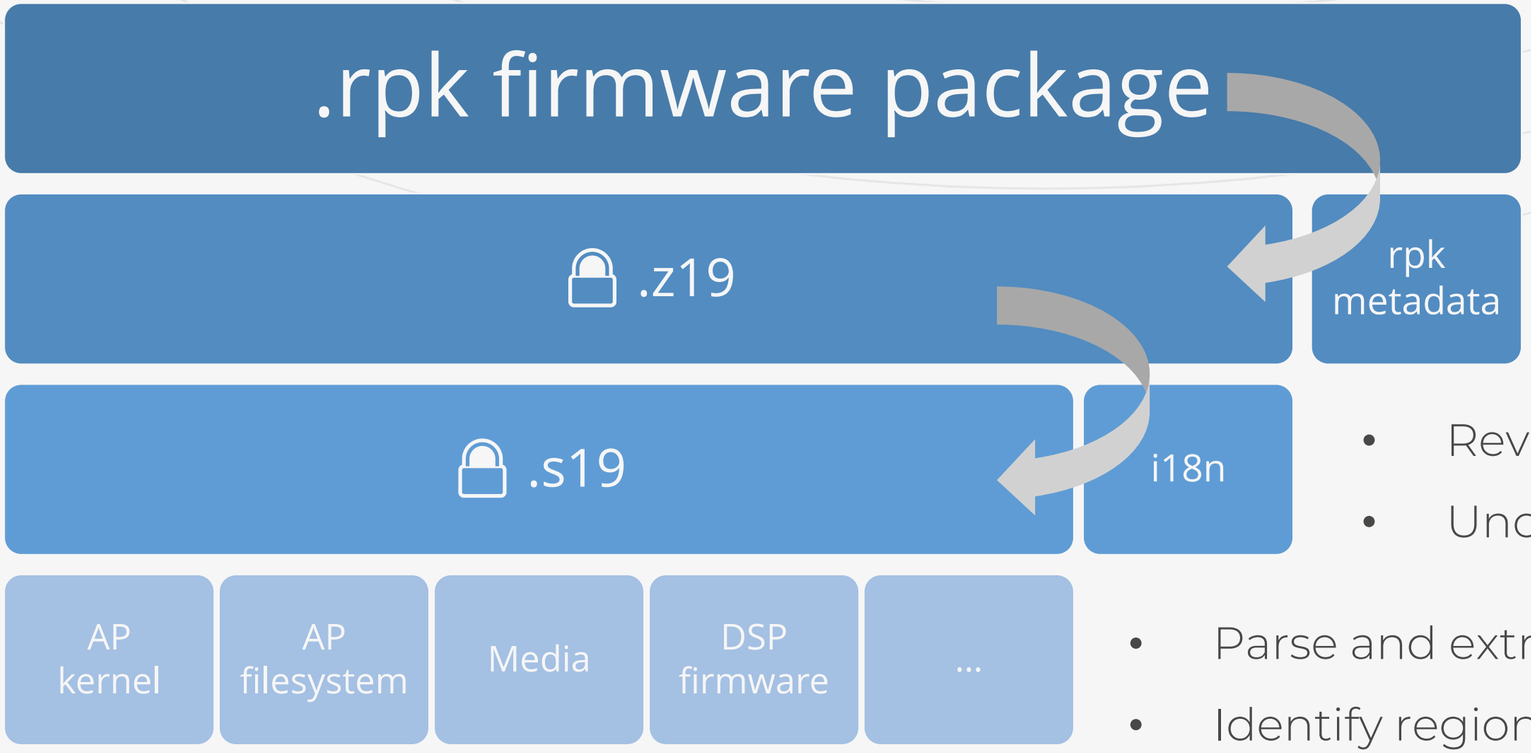

- Reverse dll for pwd
- Uncompress

- Reverse another dll for pwd
- Uncompress

- Parse and extract .s19 (SREC)
- Identify region types
- Extract/unpack

Confirming assumptions

Trusted Execution Environment (TEE) used for TETRA crypto?

- No proper DSP reversing tooling
- How to find out?

Confirming assumptions

Trusted Execution Environment (TEE) used for TETRA crypto?

- High-entropy DSP FW area
- TEE API syscall xrefs

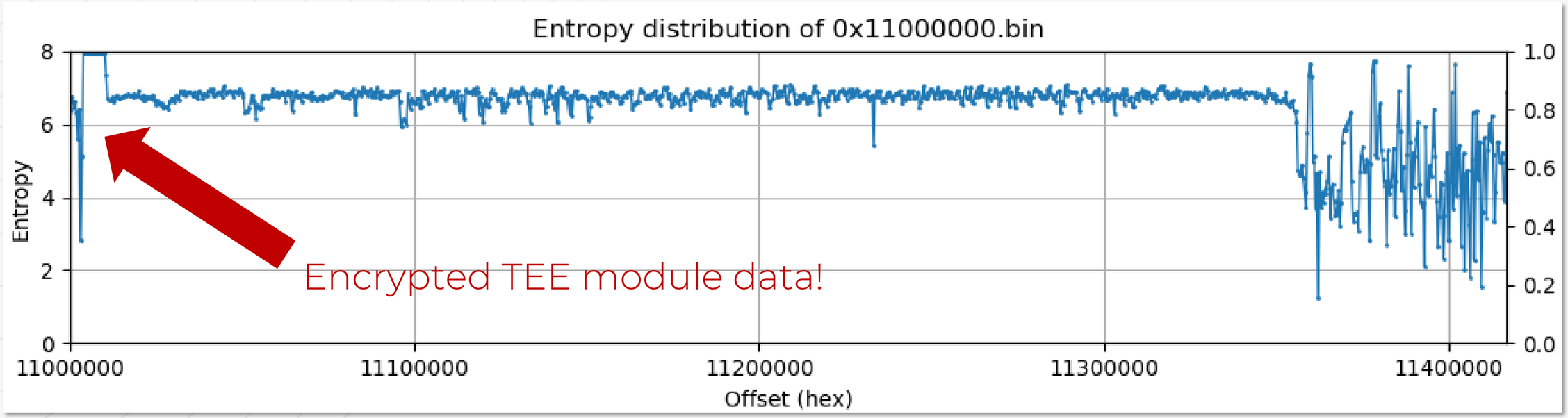

The plan

Entry on AP

Modem AT command interface	NAND modifications	Peripheral interface (gps, lcd, ...)

AP-DSP

Memory access controls	DSPLINK library

DSP-TEE

TEE module code exploitation	TEE decryption power side channel	TEE decryption timing side channel

The plan

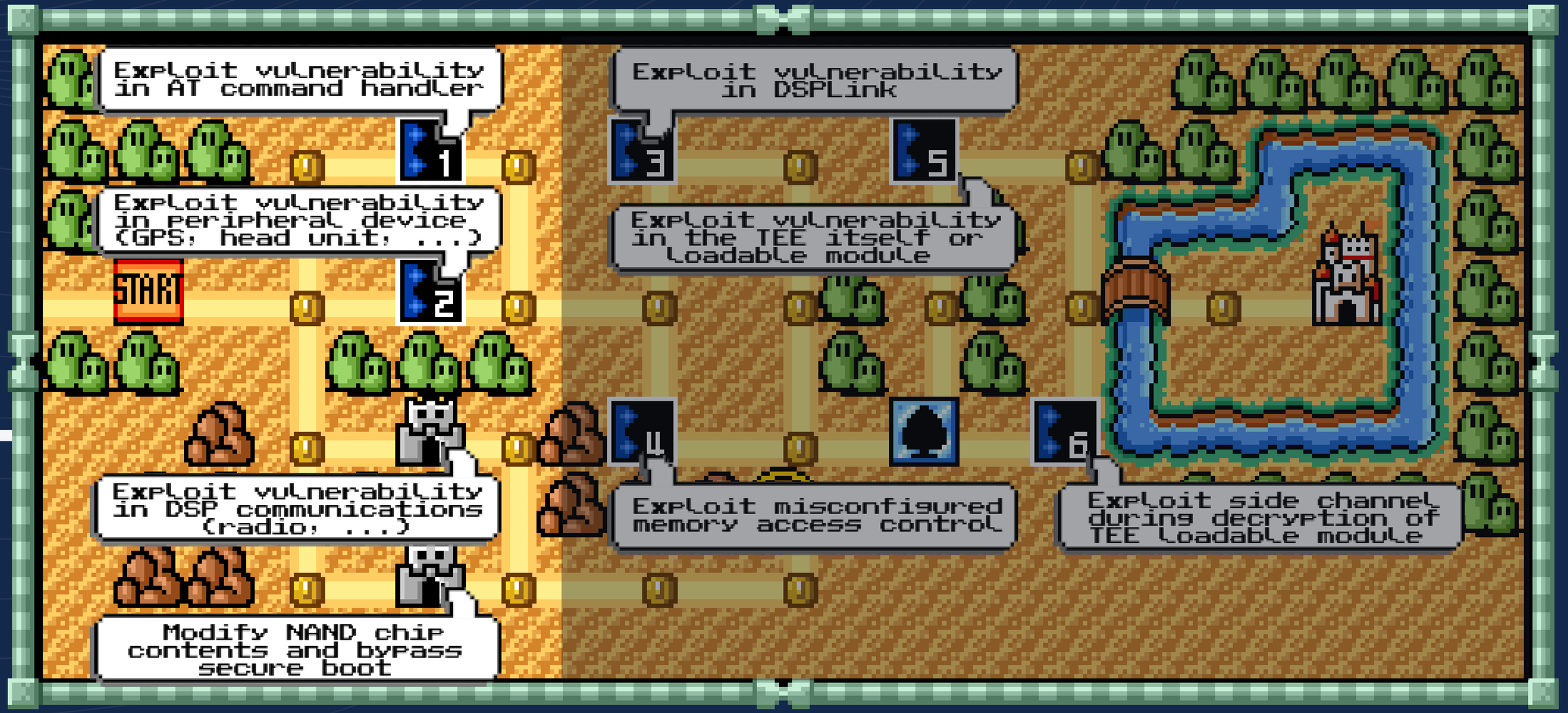
Exploit vulnerability in AT command handler
1
Exploit vulnerability in peripheral device (GPS, head unit, ...)
START
2
Exploit vulnerability in DSP communications (radio, ...)
Modify NAND chip contents and bypass secure boot
Exploit vulnerability in DSPLink
3
5
Exploit vulnerability in the TEE itself or loadable module
4
Exploit misconfigured memory access control
6
Exploit side channel during decryption of TEE loadable module

AT modem command interface

- Read/write parameters
- Usage commands
- Firmware analysis yields command list
- Want those with strings / variable length handling

```
AT+CNUM      (0-7),(0-1023163831677215),[(Alpha)]
AT+MCDNCN    (1-42 chars),(1-14 chars)
AT+MCDNTN    (1-42 chars),(1-14 chars),(1-300),(0-8)
AT+MCTGDW    (1-2000),(0-12 chars),(0-15999999,16777215),
             (380000000-430000000),(0-999,1023),(0-16383)
```

Format string vulnerability

AT+MCTGDW : Set an entry in the talk group list

AT+CTGL : Enumerate the talk group list

- Classic format string vuln!
  - We can write arbitrary data to stack
- If we control any value on the stack, we can write anywhere
  - Unfortunately, we don't :/

```
if ( bOutputType == 1 )
{
  GetDmoEntry(&szCtlglLine, *(void **)(a1 + 0xC4), i, 1, 0);
  if ( std::string::length(&szCtlglLine) )
  {
    std::string::appendFormat((std::string *)(a1 + 0xEC), "\r\n");
    std::string::appendFormat((std::string *)(a1 + 0xEC), "%d,", bFolderIndex);
    szCtlglLineCharPtr = std::string::c_str(&szCtlglLine);
    std::string::appendFormat((std::string *)(a1 + 0xEC), szCtlglLineCharPtr);// vuln hits
  }
  p_szCtlglLine = &szCtlglLine;
}
```

```
AT+MCTGDW=5,"DMO6%p",2005,390000000,0,0

OK
AT+CtGL?

+CTGL: 1,DMO Folder
1,2000,DMO1
1,2001,DMO2
1,2002,DMO3
1,0000000000002003,DMO4
1,0000000000002005,DMO60x80000000

OK
```

The exploit

- Frame pointers to the rescue!

- Suppose that arg 55 is a frame pointer
  - Part of stack frame chain (linked list)
  - Next FP is arg 59

- Set LSB of arg 59 to 0x80 ("%128c%55$hhn")
  - Now points to byte 0 of arg 79
  - Write ‘A’ to byte 0 ("%65c%59$hhn“)

- Iterate LSB 0..3 to fully control arg 79
  - **Write-what-where** (“%66c%79$hhn”)

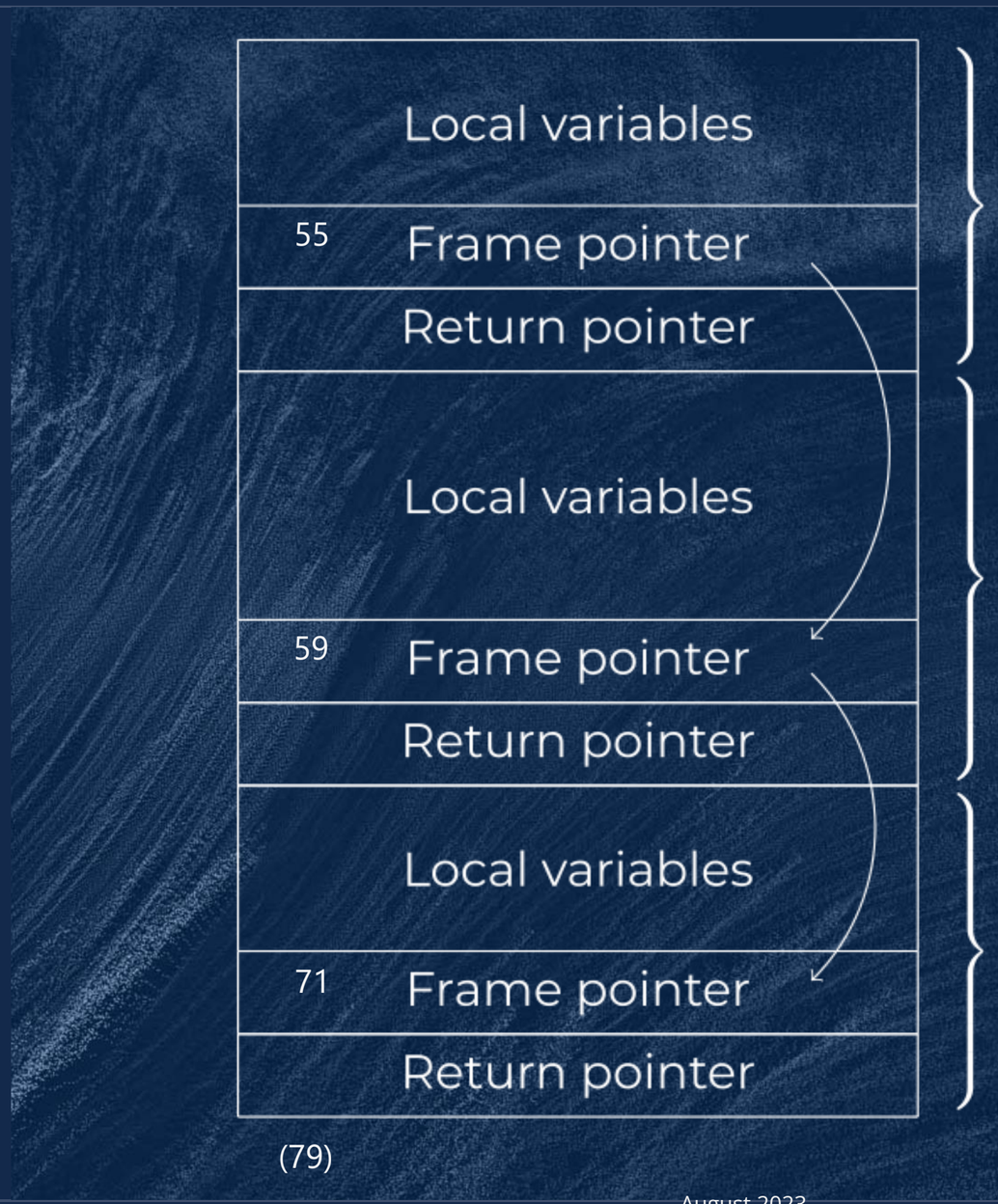

sales@midnightblue.nl // midnightblue.nl // All Right Reserved

Making it work

- Now have write-what-where
- Turns out that the heap is RWX
  - should be easy
- Approach:
  - Write shell code to heap
  - Overwrite some pointer to executable code
  - Trigger execution of that pointer
  - Profit



[+] Got a root shell on the Application Processor

```
route -n
/tmp # Kernel IP routing table
Destination     Gateway         Genmask         Flags Metric Ref    Use Iface
192.168.1.0     0.0.0.0         255.255.255.0   U     0      0        0 eth0.2
192.168.0.0     0.0.0.0         255.255.255.0   U     0      0        0 eth0
dmesg | tail
/tmp # [    2.730000] yaffs: passed flags ""
[    2.730000] yaffs: Attempting MTD mount on 31.2, "mtdblock2"
[    2.730000] yaffs: restored from checkpoint
[    2.730000] yaffs_read_super: isCheckpointed 1
[    2.860000] Serial: 8250/16550 driver, 3 ports, IRQ sharing disabled
[    2.860000] serial8250.0: ttyS0 at MMIO 0x1c42000 (irq = 25) is a 16550A
[    2.860000] serial8250.0: ttyS1 at MMIO 0x1d0c000 (irq = 53) is a 16550A
[    2.860000] serial8250.0: ttyS2 at MMIO 0x1d0d000 (irq = 61) is a 16550A
[    2.970000] ToolDev : application firestarter found, pid: 16
[    3.370000] eth0: attached PHY driver [Generic PHY] (mii_bus:phy_addr=1:00, id=
df -h
/tmp # Filesystem                Size      Used Available Use% Mounted on
/dev/root                10.8M     10.8M         0 100% /
tmpfs                   128.0K      4.0K    124.0K   3% /var/run
tmpfs                    16.0M      2.0M     14.0M  13% /tmp
/dev/ucfg                 2.5M      1.3M      1.2M  50% /mnt/ucfg
/dev/codeplug            41.8M     15.1M     26.7M  36% /mnt/flash
/dev/keys                 2.0M      1.1M    876.0K  57% /mnt/keys
cat /proc/cmdline
/tmp # mem=32M console=/dev/null root=/dev/ram0 initrd=0xc1000000,5M ramdisk_size=5
```

- Root shell achieved 💪

The plan


Exploit vulnerability in AT command handler
M
Exploit vulnerability in peripheral device (GPS, head unit, ...)
START
2
Exploit vulnerability in DSP communications (radio, ...)
Modify NAND chip contents and bypass secure boot
Exploit vulnerability in DSPLink
3
5
Exploit vulnerability in the TEE itself or loadable module
4
Exploit misconfigured memory access control
6
Exploit side channel during decryption of TEE loadable module

A tale of two cores

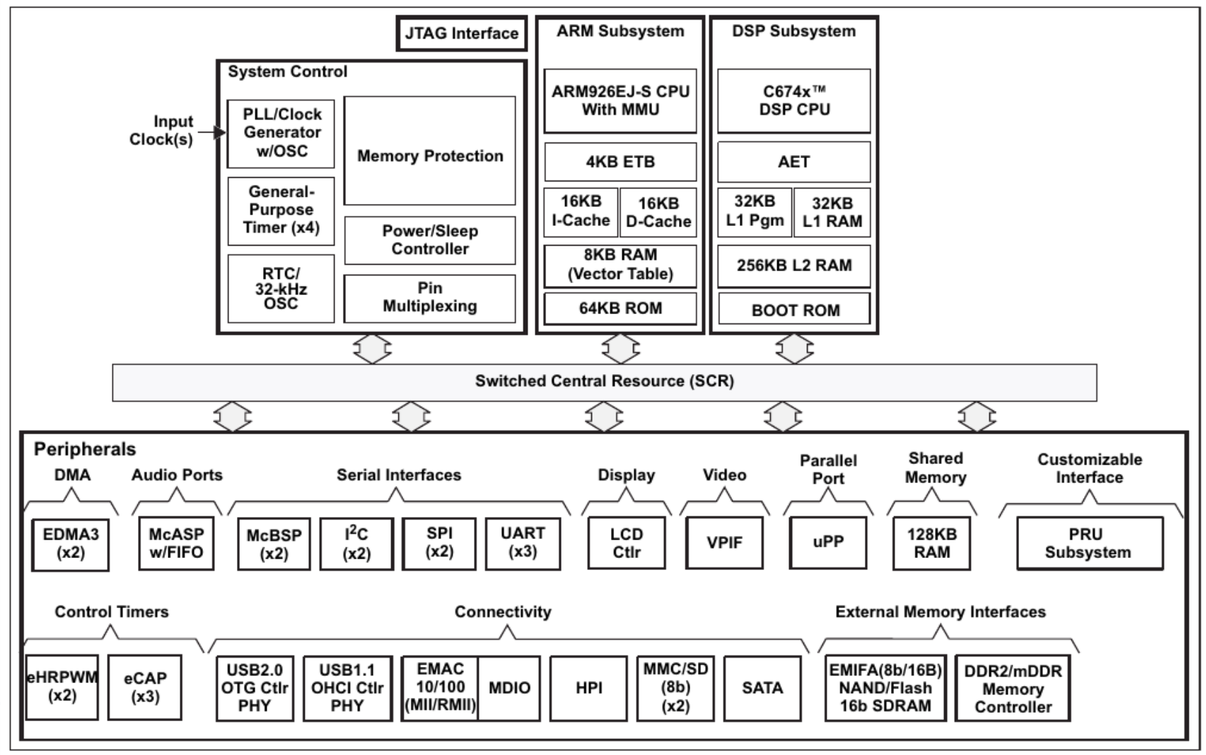

Source: OMAP-L138 C6000 DSP+ARM Processor datasheet (SPRS586J)

- AP: ARM
- DSP: C674x
- Shared:
- 128KB internal RAM
- External DDR2 memory

- We somehow need to move laterally and gain control over the DSP.
  - Abuse DMA?

Memory protection

- Memory must be segmented to prevent access by random unauthorized cores/devices
- MPUs implement a ‘firewall’
- OMAP-L138 has MPUs

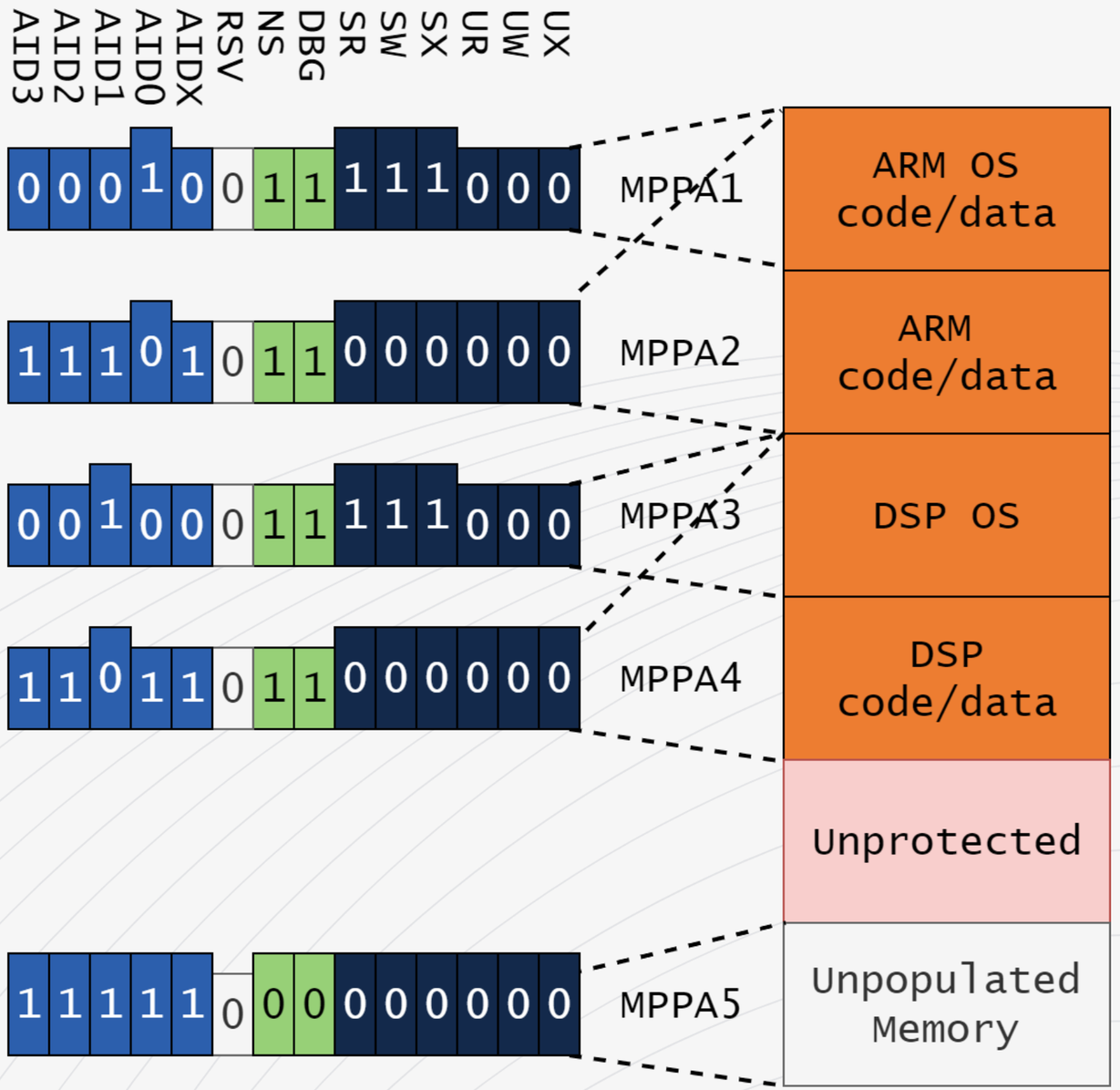

The plan

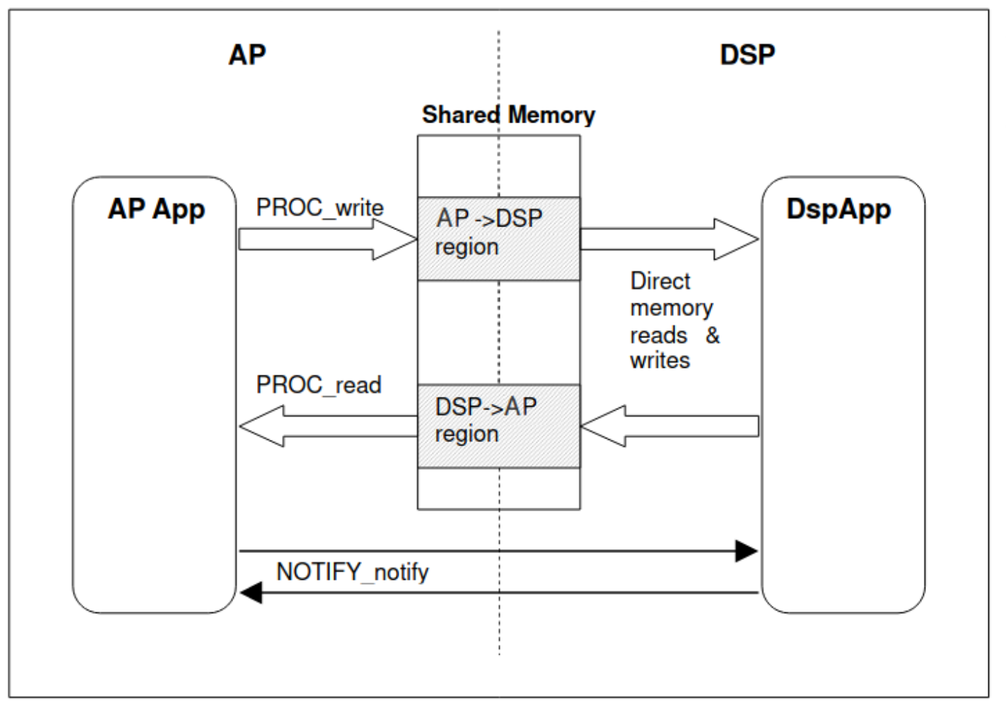

Source: DSP/BIOS™ Link user guide

- Dump MPU config
- Find ranges that are:
  - Used by DSP
  - Writeable by AP
- Identify and exploit an interface that uses such a shared memory range
  - Example: DSPLINK

```
[i] Dump MPU1 config (addr 01E14000 len 8)
[+] Got rev 0149814E conf 01C00600
    00000000 00000110 11000000 00000001
    |------|                                address alignment 2^0KB == 1KB
           |--|                               num fixed ranges: 0
              |--|                            num programmed ranges: 6
                                 |            default: ASSUME_ALLOWED

[i] Dump MPU1 range 1 (addr 01E14200 len 12)
[+] Got 00000000 FFFFFFFF FFFEFF03
       |------|                               range start: addr 0
              |------|                        range end: addr ffffffff
                     |------|                 permission flags
    Permissions:
    00000011111111111111011111111
       |-------------|                        applies to AP and DSP
                     |----|                   all permissions
```



Taking control of the DSP

- Implemented framework for running code on DSP
- Multiple AP kernel modules
- Hijack control of DSP
- Prevent board reset
- Set up shared physical memory region

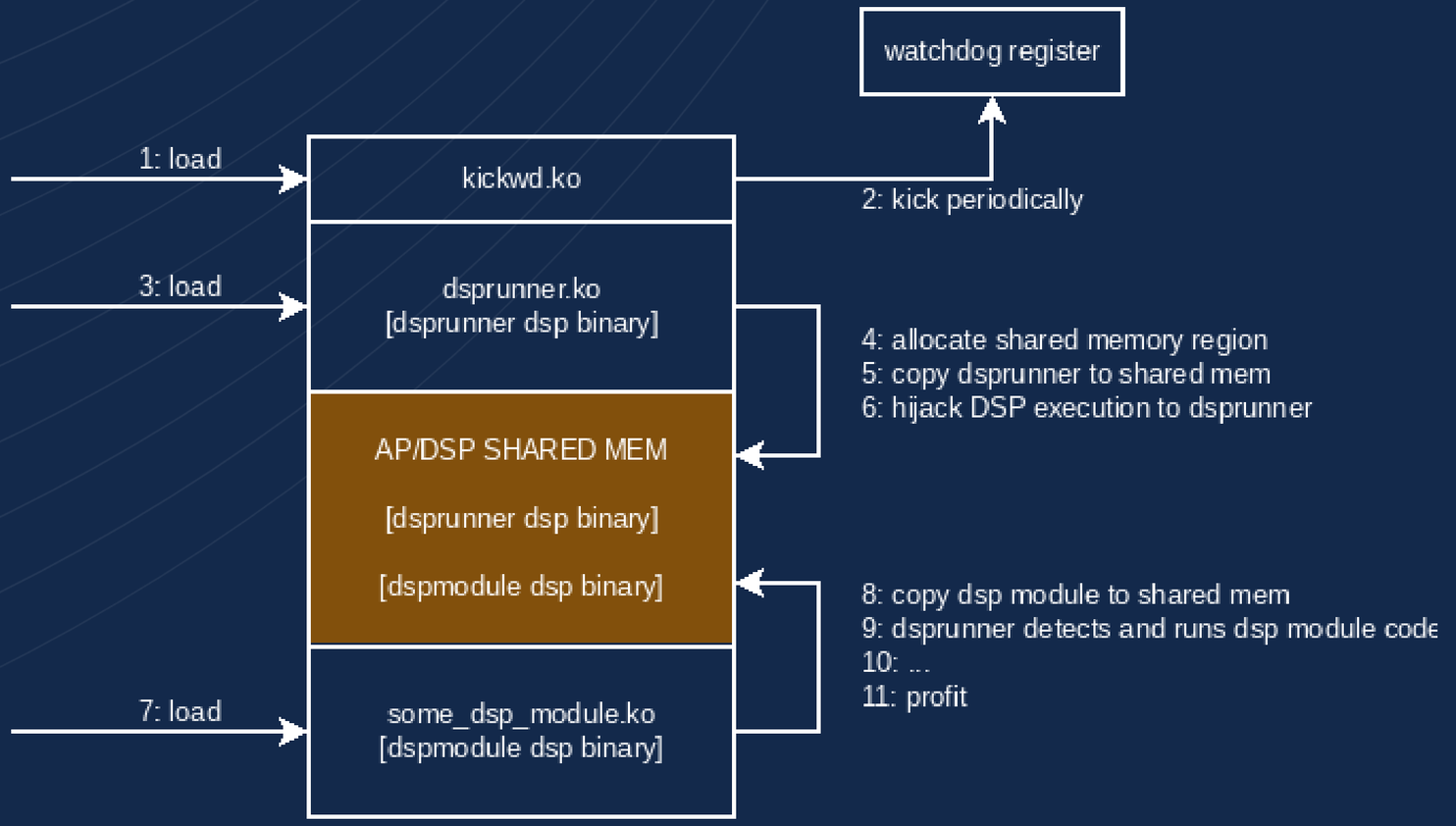

MIDNIGHT BLUE

DSP reversing

- Hellish architecture
  - Delayed branches
  - Variable degree of concurrency
  - Conditionals
- No IDA support
- DIY time!
  - Implemented disassembler
  - Ultimately, also a decompiler

sales@midnightblue.nl // midnightblue.nl // All Right Reserved

```
.DSP_L2_ROM:007F8B20
.DSP_L2_ROM:007F8B20 SK_LOAD_handler_Impl:                    ; CODE XREF: SK_LOAD_handler+A↓j
.DSP_L2_ROM:007F8B20                    MVC     .S2     NTSR, B0
.DSP_L2_ROM:007F8B24                    MVC     .S2     TSR, B1
.DSP_L2_ROM:007F8B28                    EXTU    .S2     B0, 31, 30, B0
.DSP_L2_ROM:007F8B2C                    OR      .D2     B0, B1, B1
.DSP_L2_ROM:007F8B30                    MVC     .S2     B1, TSR
.DSP_L2_ROM:007F8B34                    RINT
.DSP_L2_ROM:007F8B38
.DSP_L2_ROM:007F8B38                    MVK     .S1     (g_dwDelegateKeyNo & 0FFFFh), A0
.DSP_L2_ROM:007F8B3C                ||  STW     .D2     A13, *B15--[10h]
.DSP_L2_ROM:007F8B40
.DSP_L2_ROM:007F8B40                    MVKH    .S1     unk_800000, A0
.DSP_L2_ROM:007F8B44                ||  STW     .D2     A14, *+B15[0Dh]
.DSP_L2_ROM:007F8B48
.DSP_L2_ROM:007F8B48                    LDBU    .D1     *+A0, A0
.DSP_L2_ROM:007F8B4C                ||  STW     .D2     B3, *+B15[0Ch]
.DSP_L2_ROM:007F8B50
.DSP_L2_ROM:007F8B50                    STW     .D2     B13, *+B15[0Bh]
.DSP_L2_ROM:007F8B54                    STW     .D2     A12, *+B15[0Ah]
.DSP_L2_ROM:007F8B58                    STW     .D2     B12, *+B15[9]
.DSP_L2_ROM:007F8B5C                    STW     .D2     A11, *+B15[8]
.DSP_L2_ROM:007F8B60
.DSP_L2_ROM:007F8B60                [A0] B      .S2     loc_7F9004
.DSP_L2_ROM:007F8B64                ||[A0] MVK  .L1     4, A0
.DSP_L2_ROM:007F8B68
.DSP_L2_ROM:007F8B68                    STW     .D2     B11, *+B15[7]
.DSP_L2_ROM:007F8B6C                    STW     .D2     A10, *+B15[6]
.DSP_L2_ROM:007F8B70                    STW     .D2     B10, *+B15[5]
.DSP_L2_ROM:007F8B74                    STW     .D2     A15, *+B15[4]
.DSP_L2_ROM:007F8B78
.DSP_L2_ROM:007F8B78                    STW     .D2     B4, *+B15[3]
.DSP_L2_ROM:007F8B7C                ||  MV      .D1X    B15, A15
.DSP_L2_ROM:007F8B7C                    ; BRANCH loc_7F9004 OCCURS
.DSP_L2_ROM:007F8B80
.DSP_L2_ROM:007F8B80                    SUBAW   .D2     B15, 0Ah, B15
.DSP_L2_ROM:007F8B84                    ADDAW   .D1     B15, 2, A11
.DSP_L2_ROM:007F8B88
.DSP_L2_ROM:007F8B88                    MV      .D2X    A11, B13
.DSP_L2_ROM:007F8B8C                ||  MVK     .S2     2Ch, B0
.DSP_L2_ROM:007F8B90
.DSP_L2_ROM:007F8B90                    SUBAW   .D2     B15, B0, B15
.DSP_L2_ROM:007F8B94                    ADDAW   .D1     B15, 2, A6 ; lpDecryptCtx
.DSP_L2_ROM:007F8B98                    STW     .D1     A6, *+A15[0Eh]
.DSP_L2_ROM:007F8B9C                    MV      .D1     A4, A13
.DSP_L2_ROM:007F8BA0
.DSP_L2_ROM:007F8BA0                    MVK     .S1     (g_abCek & 0FFFFh), A4
.DSP_L2_ROM:007F8BA4                ||  SUBAW   .D2     B15, B0, B15
.DSP_L2_ROM:007F8BA8                                    ; lpKey
```

```
30 // Address range: 0x7f8b20 - 0x7f903c
31 int32_t SK_LOAD_handler_Impl(int32_t result, int32_t a2, int32_t a3, int32_t a4, ir
32     // 0x7f8b20
33     __SET_INTERRUPTS_ENABLED(true);
34     if (*(char *)&g_dwDelegateKeyNo != 0) {
35         // 0x7f9004
36         __SET_INTERRUPTS_ENABLED(false);
37         return result;
38     }
39     // 0x7f8b80
40     int32_t v1; // bp-104, 0x7f8b20
41     int32_t v2 = &v1; // 0x7f8b80
42     char * v3 = (char *)(v2 - 168); // 0x7f8b98
43     AES_keyschedule(g_abCek, (char *)(v2 - 344), v3);
44     int32_t v4; // bp-96, 0x7f8b20
45     int32_t v5 = &v4; // 0x7f8bbc
46     int32_t v6 = result; // 0x7f8bbc
47     for (uint32_t i = 6; i >= 0xffffffff; i--) {
48         int32_t v7 = v6;
49         v6 = v7 + 4;
50         *(int32_t *)v5 = *(int32_t *)v7;
51         v5 += 4;
52     }
53     // 0x7f8bd0
54     AES_decrypt((char *)&v4, (char *)&v4, v3);
55     int32_t v8; // bp-80, 0x7f8b20
56     int32_t result2 = AES_decrypt((char *)&v8, (char *)&v8, v3); // 0x7f8bec
```

- Reliable DSP code execution!



Mission accomplished

The plan


Exploit vulnerability in AT command handler
Exploit vulnerability in DSPLink
Exploit vulnerability in peripheral device (GPS, head unit, ...)
Exploit vulnerability in the TEE itself or loadable module
START
Exploit vulnerability in DSP communications (radio, ...)
Exploit misconfigured memory access control
Exploit side channel during decryption of TEE loadable module
Modify NAND chip contents and bypass secure boot

Bonus item


Take this ChipWhisperer. It will help you on your way.
NewAE
Technology

Side channel analysis

- Obtained ChipWhisperer CW1200
- We need to:
  - Find clock line on PCB
  - Find DSP power line
  - Decrease DSP clock speed to <25MHz
  - Correlate measurements to key
- Nightmare 😵
- Let’s try something else…

DSP Trusted Execution Environment

Privilege / Security	Secure	Non-secure
Supervisor	Secure Kernel and Secure Boot Loader	DSP/BIOS or other OS kernels
User	Licensed Algorithms (e.g. WMV, WMA, etc…)	Non-secure Applications or other OS kernels

- **TI ROM code implements Secure Kernel**
  - Runs in secure mode
  - Non-secure code can do Secure Kernel API Calls
  - **`SK_LOAD`** call allows for runtime loading of encrypted (**TETRA**) module. Decrypted (**AES**) and validated (**RSA**), then loaded as TEE module
  - **`SK_ALGOINVOKE`** call allows non-secure code to invoke a function of a loaded TEE module.
  - Module encrypted with factory-set Customer Encryption Key (**CEK**)

Inspiration

- **Idea:**
  - Modern computers use caches to speed up some memory accesses
  - Introduces timing differences
  - These may leak information on secrets

- **DJB 2005*:**
  - Build profile of timing characteristics, then observe target system's characteristics
  - Correlate profile with observation
  - Derive which key fits best

* Cache-timing attacks on AES – Daniel J. Bernstein, 2005

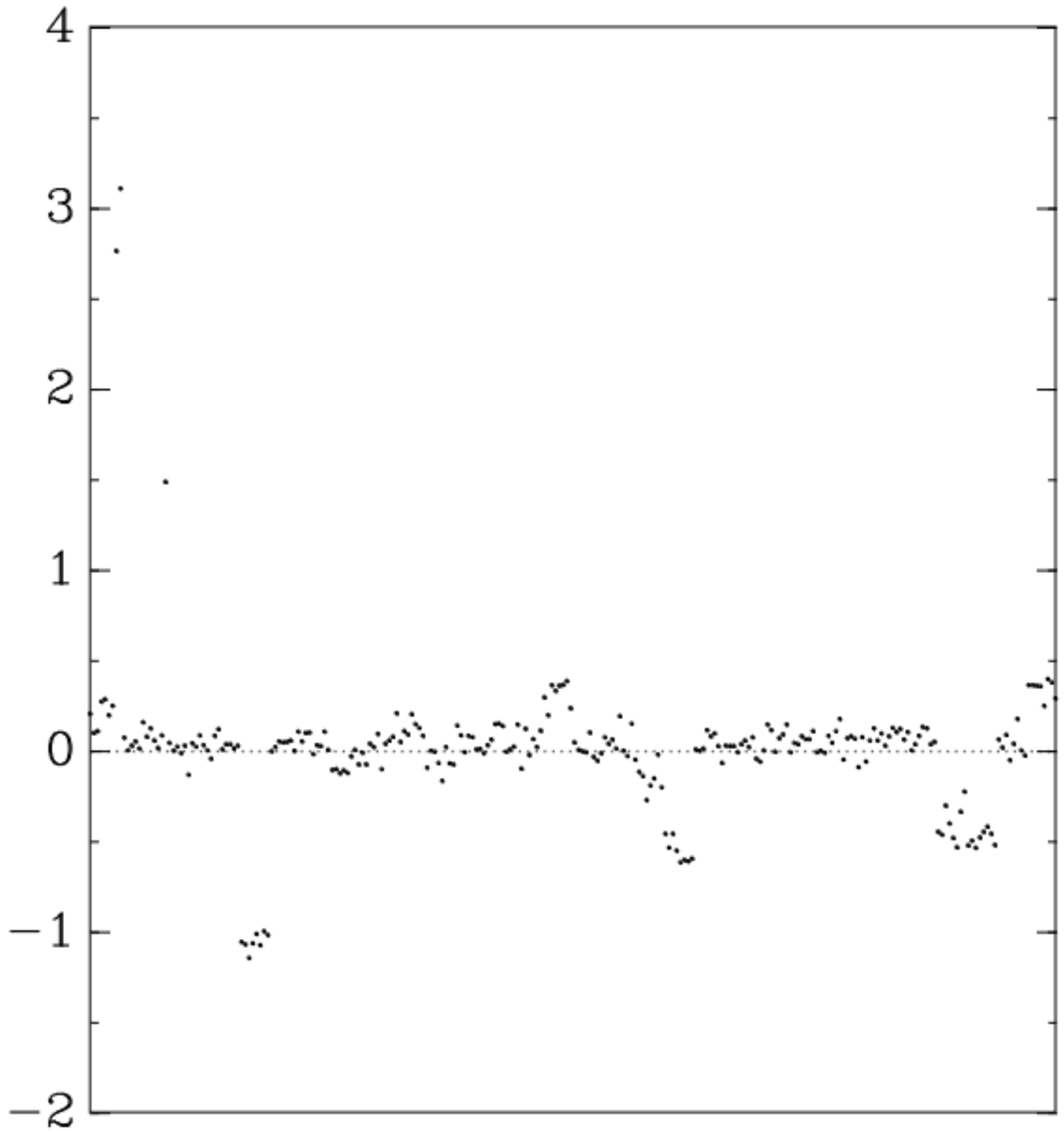

AES encryption speed for random plaintexts, with the first input byte set to values 0 .. 256

DSP cache architecture

- L1D, L1C, L2 caches
- L1D data cache: 64-byte lines
- Memory read is..
  - **Fast** if already in cache
  - **Slow** if not in cache
- We can:
  - Evict addresses from cache
  - Freeze cache (switch to read-only)

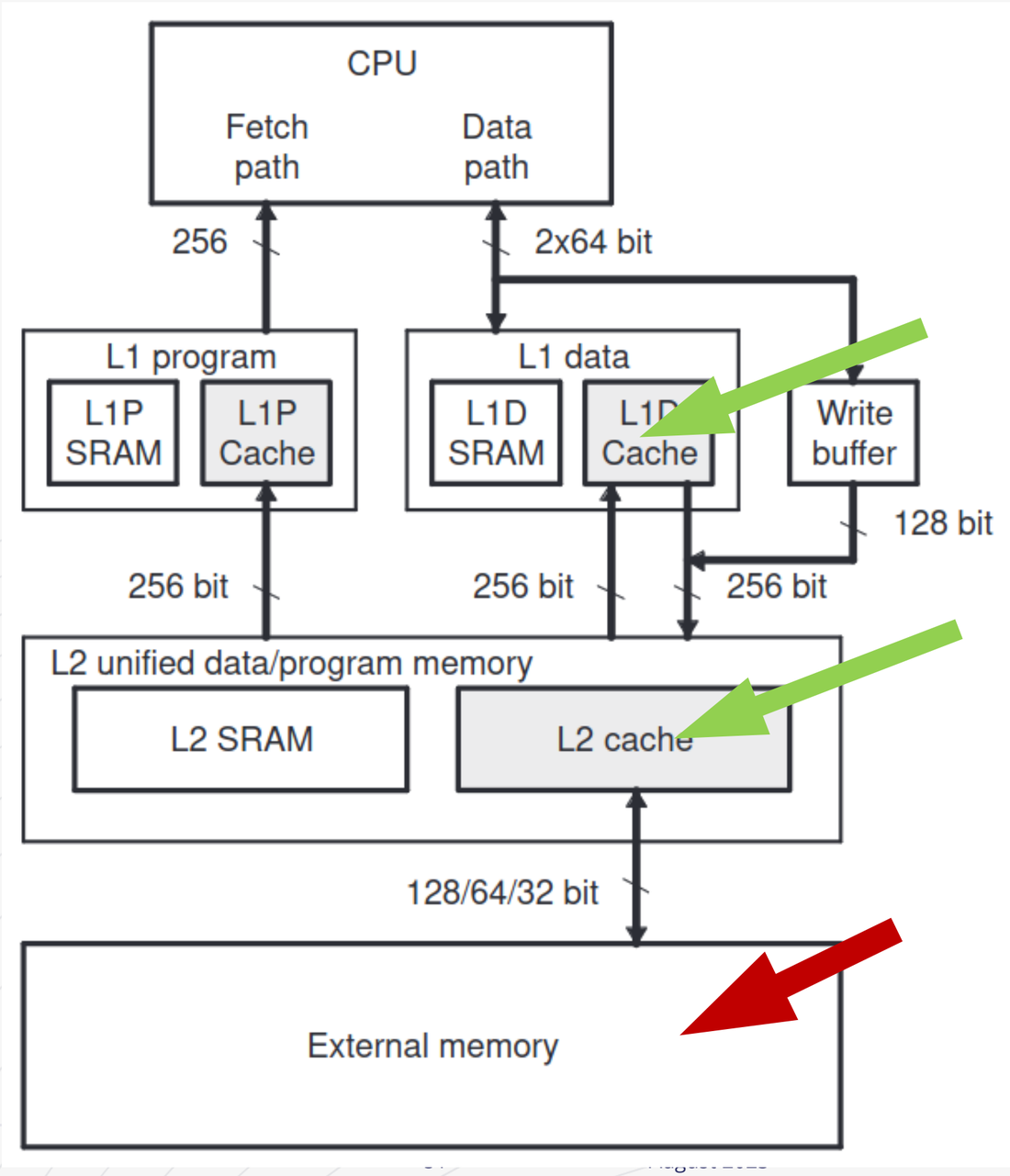

* TMS320C674x DSP Cache User's Guide (SPRUG82A)

 All Right Reserved

Next step?

- We have some control over cache
- Which AES decryption step could we target?
  - InverseSubBytes uses an sbox
  - Memory lookup
  - But where is it?
- Evict secret ROM page line from cache
- Measure running time
  - Repeat for each line
- Plot

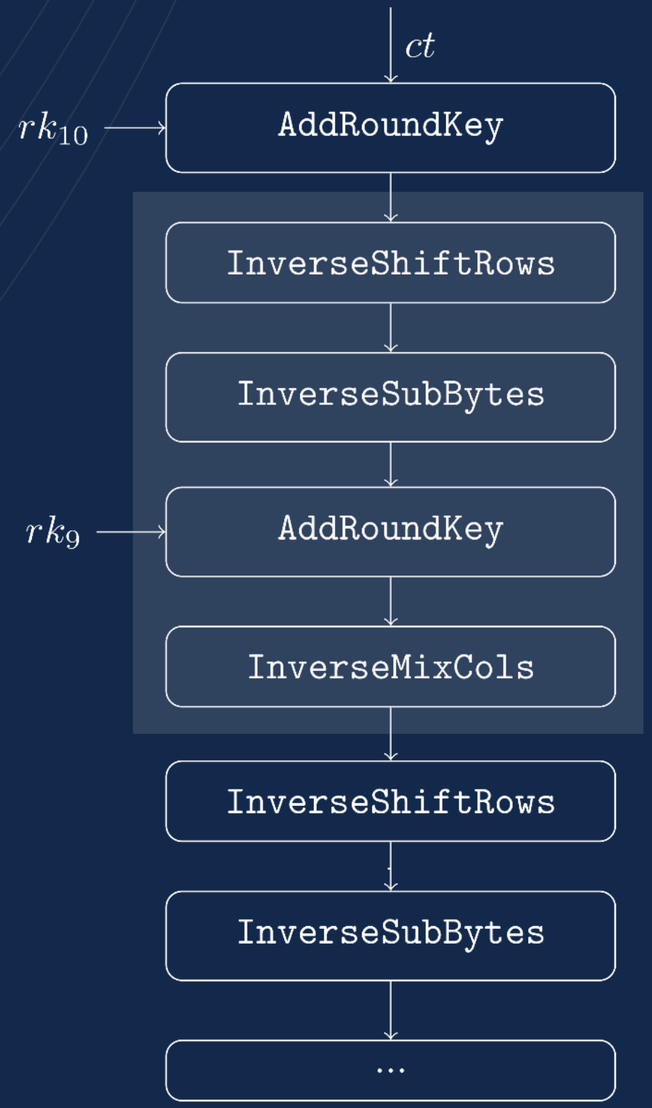

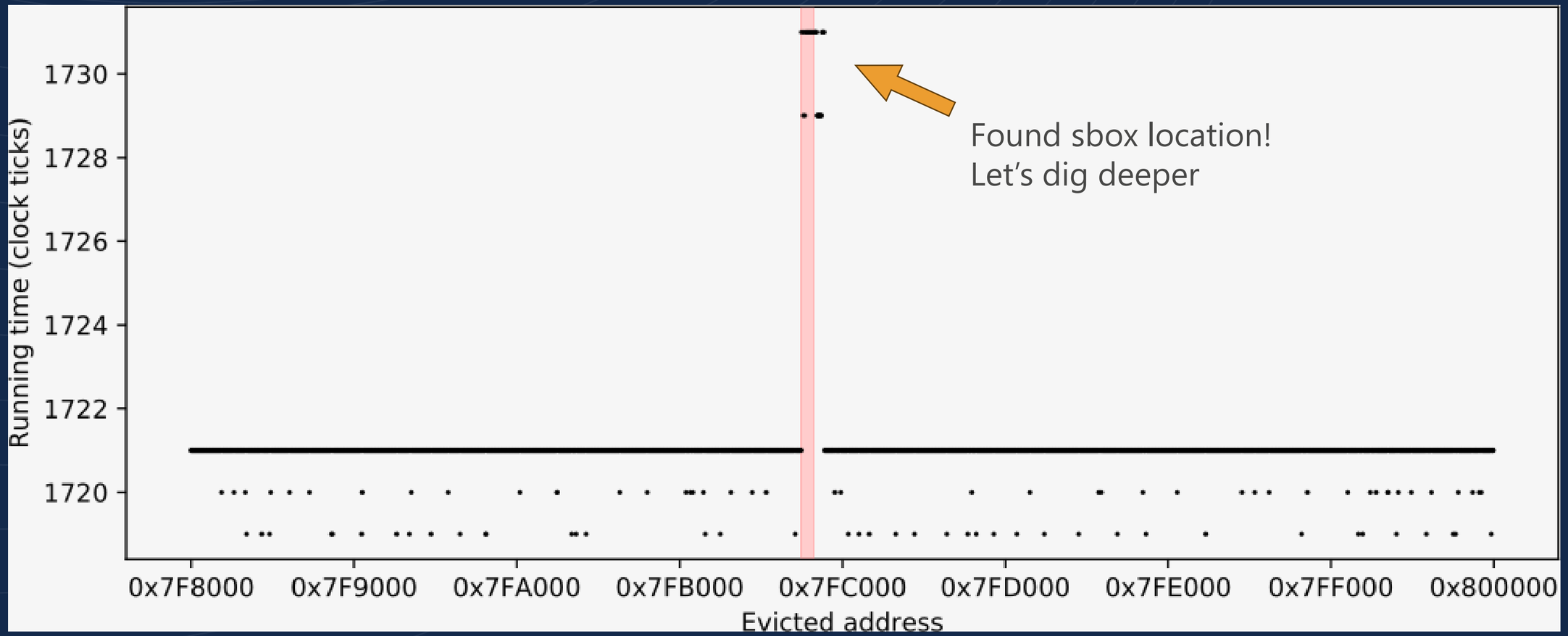
Running time (clock ticks)
1730
1728
1726
1724
1722
1720
0x7F8000
0x7F9000
0x7FA000
0x7FB000
0x7FC000
0x7FD000
0x7FE000
0x7FF000
0x800000
Evicted address
Found sbox location!
Let's dig deeper

Sbox cache state

- **Prepare cache as follows:**
  - Run SK_LOAD: full sbox in cache
  - Evict first 32 sbox entries (first octant)
  - Enable cache freeze

- *We now observe a timing penalty whenever an sbox lookup hits the first sbox octant*

- *This setup is assumed for the remainder of the presentation*

	00	01	02	03	04	05	06	07	08	09	0a	0b	0c	0d	0e	0f
00	52	09	6a	d5	30	36	a5	38	bf	40	a3	9e	81	f3	d7	fb
10	7c	e3	39	82	9b	2f	ff	87	34	8e	43	44	c4	de	e9	cb
20	54	7b	94	32	a6	c2	23	3d	ee	4c	95	0b	42	fa	c3	4e
30	08	2e	a1	66	28	d9	24	b2	76	5b	a2	49	6d	8b	d1	25
40	72	f8	f6	64	86	68	98	16	d4	a4	5c	cc	5d	65	b6	92
50	6c	70	48	50	fd	ed	b9	da	5e	15	46	57	a7	8d	9d	84
60	90	d8	ab	00	8c	bc	d3	0a	f7	e4	58	05	b8	b3	45	06
70	d0	2c	1e	8f	ca	3f	0f	02	c1	af	bd	03	01	13	8a	6b
80	3a	91	11	41	4f	67	dc	ea	97	f2	cf	ce	f0	b4	e6	73
90	96	ac	74	22	e7	ad	35	85	e2	f9	37	e8	1c	75	df	6e
a0	47	f1	1a	71	1d	29	c5	89	6f	b7	62	0e	aa	18		
b0	fc	56	3e	4b	c6	d2	79	20	9a	db	c0	fe	78			
c0	1f	dd	a8	33	88	07	c7	31	b1	12	10	59	27		ec	5f
d0	60	51	7f	a9	19	b5	4a	0d	2d	e5	7a	9f	93		9c	ef
e0	a0	e0	3b	4d	ae	2a	f5	b0	c8	eb	bb	3c	8			
f0	17	2b	04	7e	ba	77	d6	26	e1	69	14	63	5			



Attack outline

- Having evicted the first octant of sbox from cache (32 entries)...
- Set $ct[0]$ to 0
- Randomize remainder of ct
- Get average running time of `SK_LOAD`
- Repeat for other values of $ct[0]$
- Plot

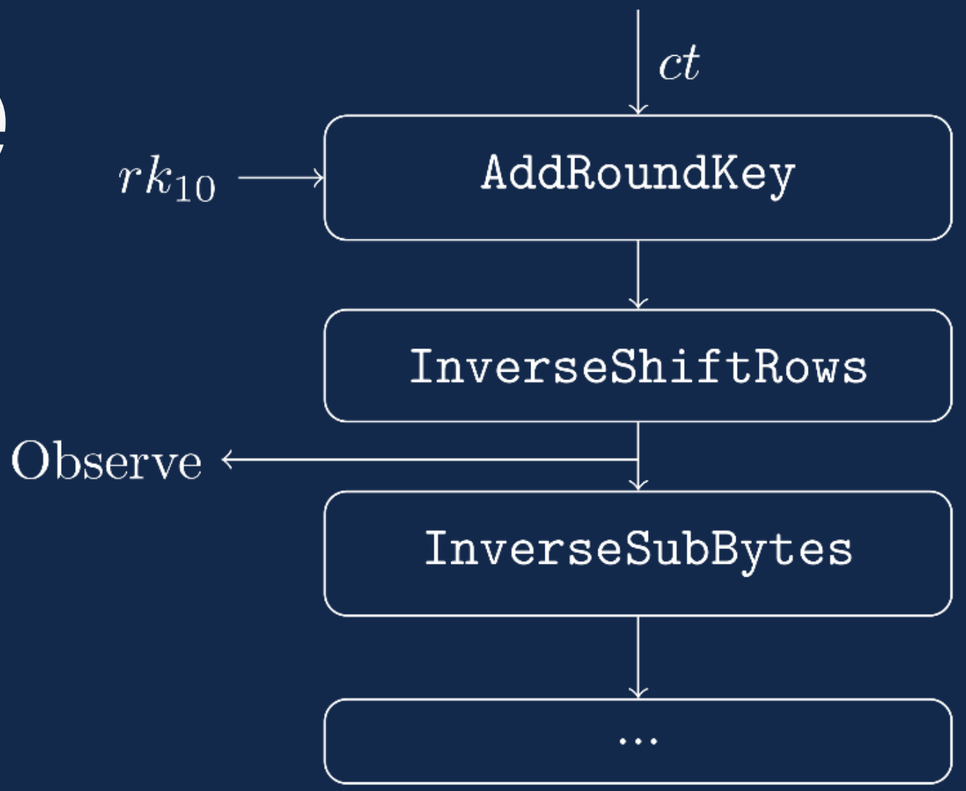

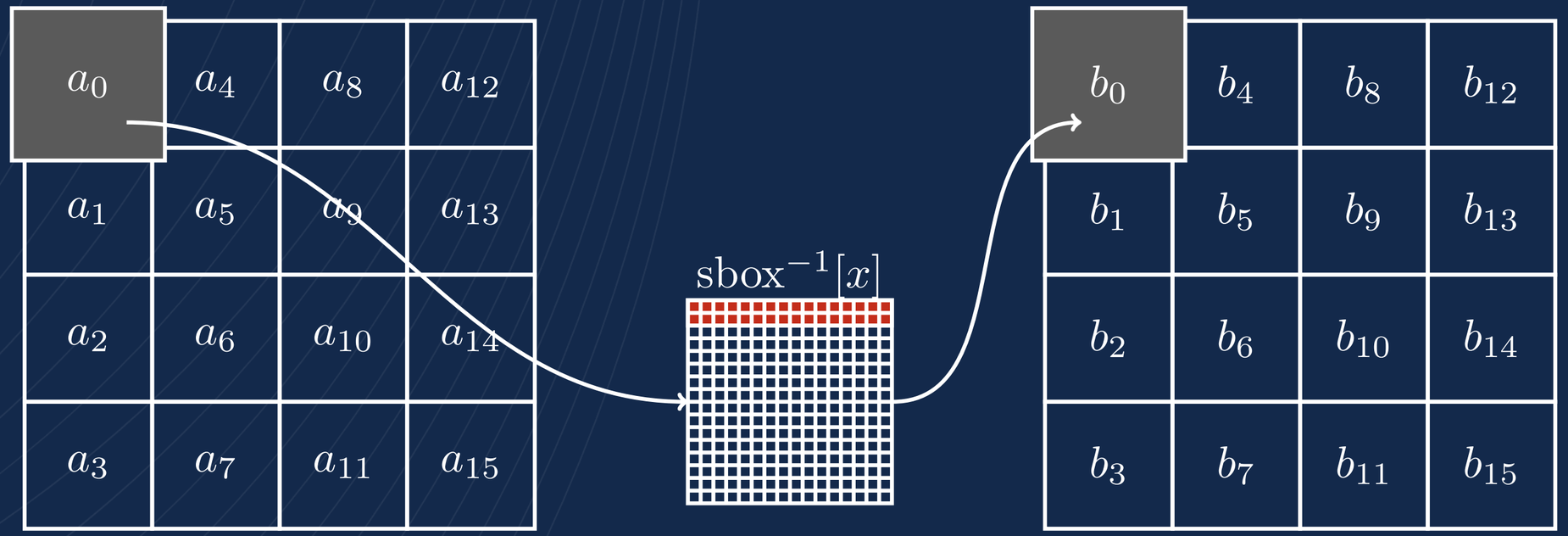

- Set $ct[0]$ to 0
- Randomize remainder of ct
- Get average running time of `SK_LOAD`

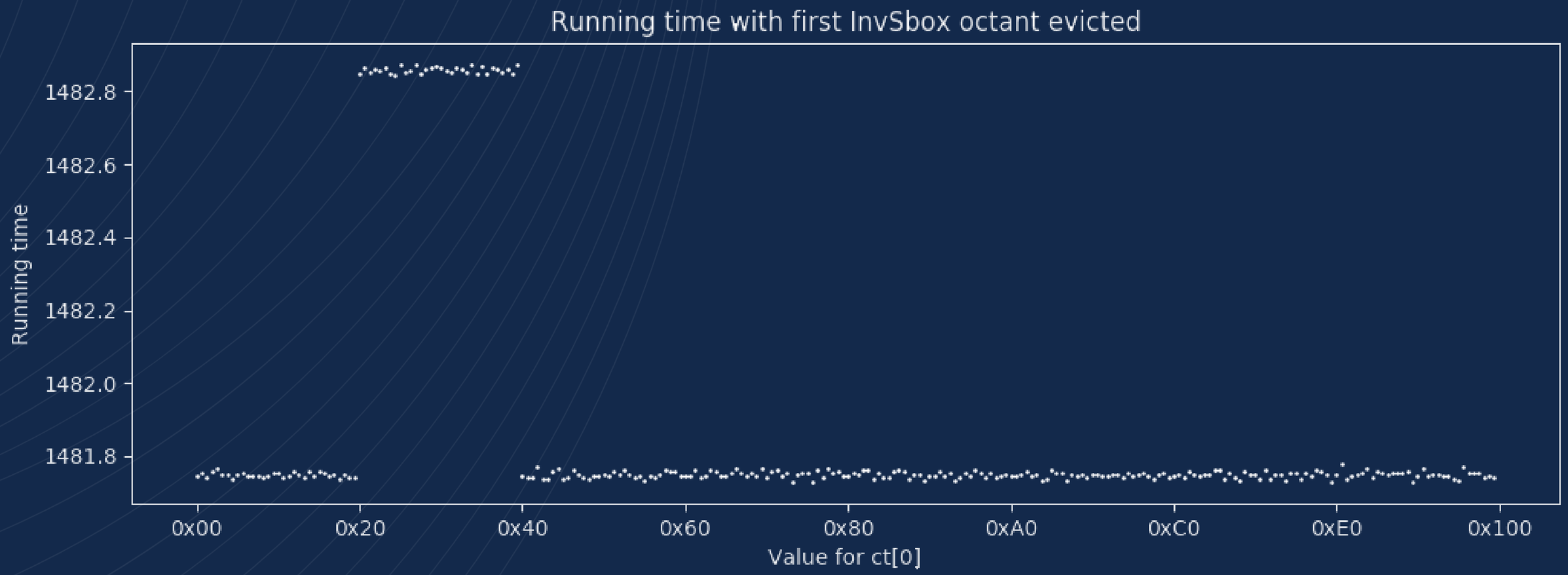

- If penalty observed: $ct[0] \oplus rk_{10}[0] < 0x20$
- Above example: $0x20 \leq rk_{10}[0] < 0x40$

Success!

- In our example: 0x20 $\leq rk_{10}[0] <$ 0x40
- Effectively 3 bits of $rk_{10}[0]$
- Can repeat to obtain 48 bits of rk_{10} !



sales@midnightblue.nl // midnightblue.nl // All Right Reserved

Success..?

- Inherently limited
  - Least significant 5 bits of $rk_{10}[0]$ do not influence which sbox octant is hit
  - Still missing 80 bits
  - Too much for exhaustive search
  - We need to go deeper



 All Right Reserved

Extended attack

- **Take attack one round further**
  - Observe penalties during round 2 `InverseSubBytes`
- **Round 1 `InverseSubBytes` has introduced required diffusion within the state byte**
  - Least significant bits of rk_{10} byte now influence the most significant bits of the state byte
- **Need to account for:**
  - Shifting of state bytes
  - Influence of rk_9
  - Diffusion over four state bytes from `InverseMixCols`

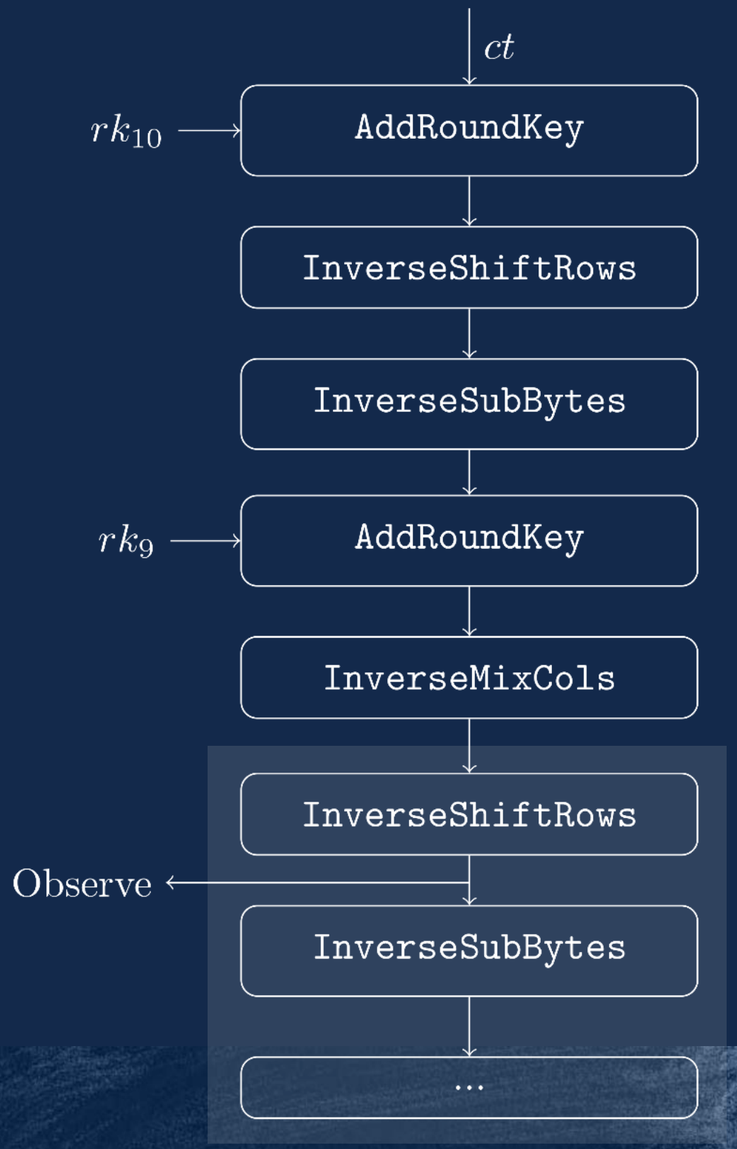

Demo: CVE-2022-25332

SK_LOAD Cache Timing Side-Channel

More hurdles

- **Additional encryption layer**
  - Adapt and repeat attack

- **Additional obfuscation layer**
  - Bang head against wall
  - Observe similarities between modules
  - …
  - Lamp moment 💡



Result



- Can extract CEK in < 1 min
- Reverse-engineered remainder of module format
  - Different section keys
  - Obfuscation scheme
- Decrypted SKLOAD module!

- Reverse-engineered SKLOAD module
- Generated TETRA crypto test vectors on LCDK
- Distilled specification, implemented C reference code

Recap

1. Format string → code exec on AP
2. Pivot to DSP via shared memory
3. Cache timing side-channel on TEE
4. …
5. Secret algos!
   … and key extraction …

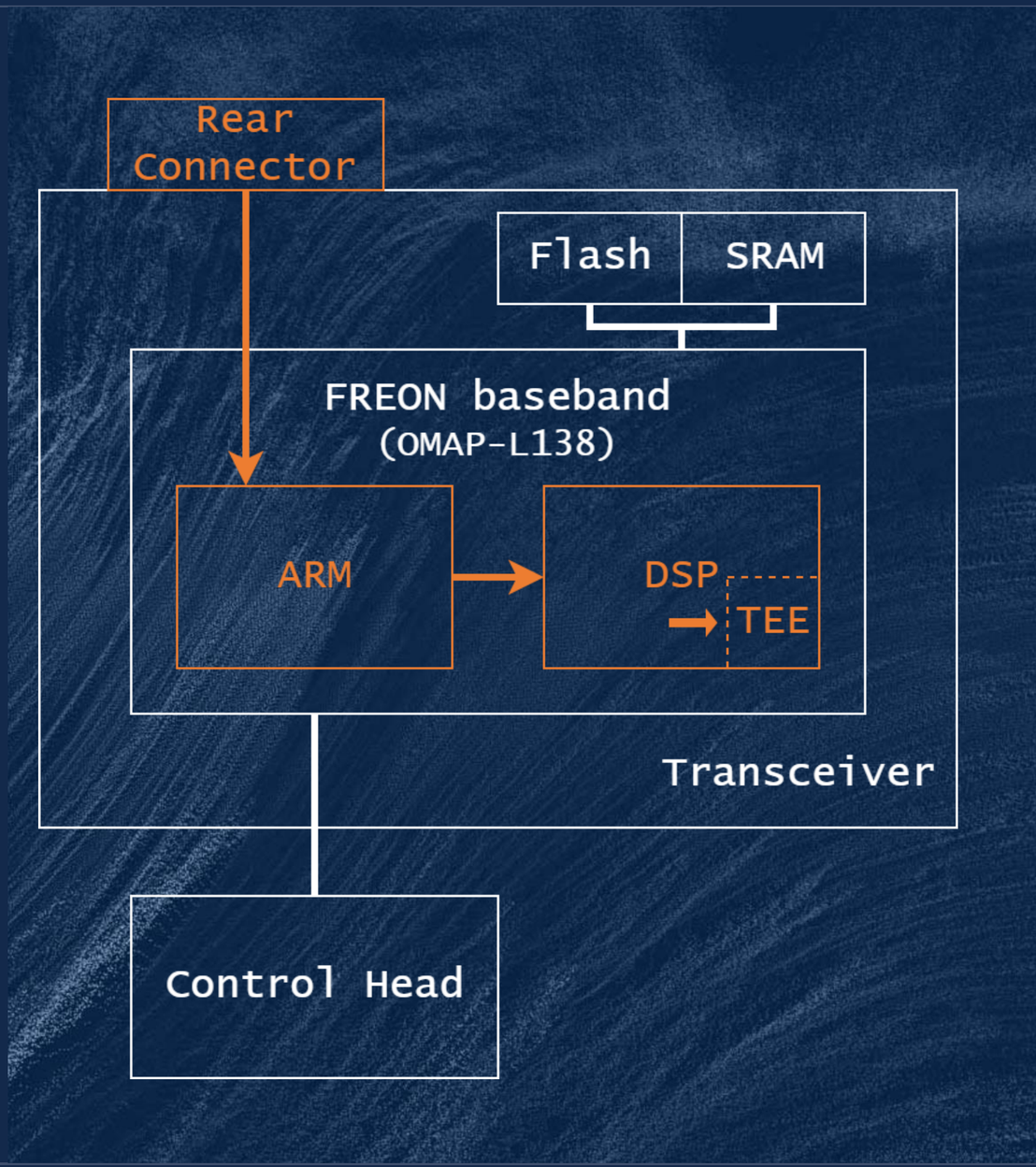



The secret TETRA primitives and their security

sales@midnightblue.nl // midnightblue.nl // All Right Reserved

TAA1 auth and OTAR

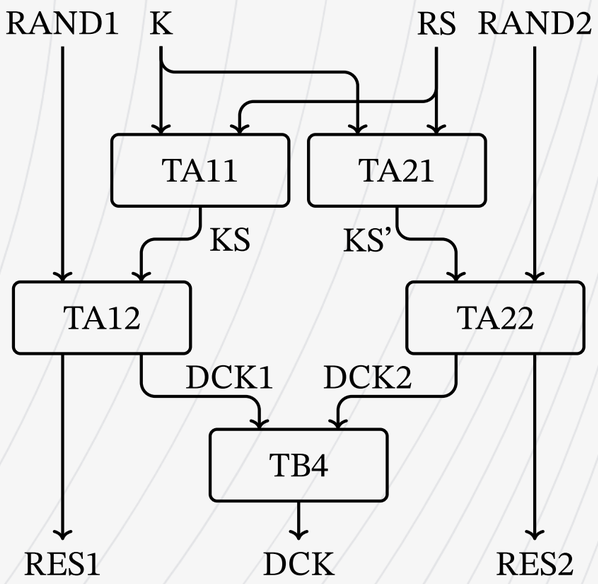

- Protocols in public standard, primitives not. We recovered:
- All TAxx based on HURDLE* cipher
  - 16-round Feistel cipher
  - 64-bit blocks, 128-bit key
- All TBx based on XOR / addition
- Some blocks identical / related
  - TA11 = TA41
  - TA12 = TA22
  - TA11(K, RS) = TA21(K, reversed(RS))

* https://impact.ref.ac.uk/casestudies/CaseStudy.aspx?Id=30193

HURDLE Block Cipher

- Block cipher, 64-bit block, 128-bit key
  - 16 rounds balanced Feistel
- Interesting round function F
  - Combines 32-bit half state with 96-bit round key
  - Cascading use of state/key bytes
- 256-entry sbox
  - Reverse-engineered it*
  - Based on Nyberg Sbox (x^{-1} in GF(2^8)) like AES

Hurdle F

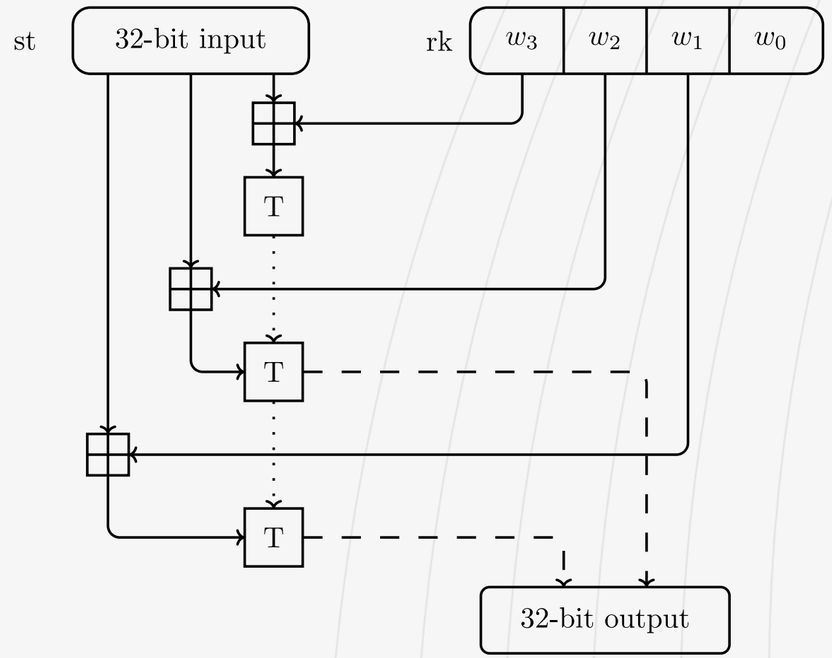

Hurdle T

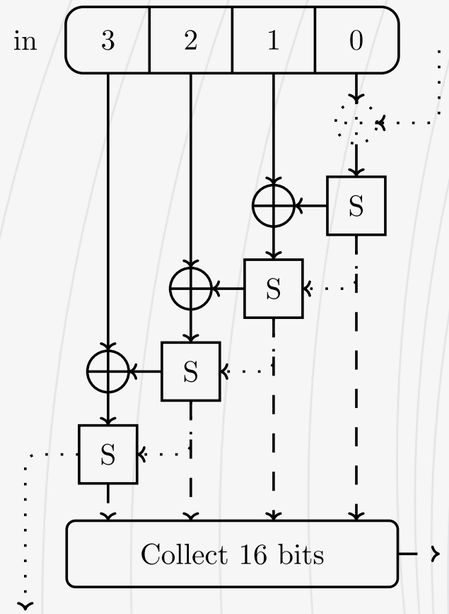

* Anomalies and Vector Space Search: Tools for S-Box Analysis - X. Bonnetain et al. https://eprint.iacr.org/2019/528.pdf

CVE-2022-24400 DCK pinning attack

- **Mutual authentication**
  - Shared long-term secret K
  - Random seed RS
  - Challenge-response (RANDx/RESx)
  - Session key DCK

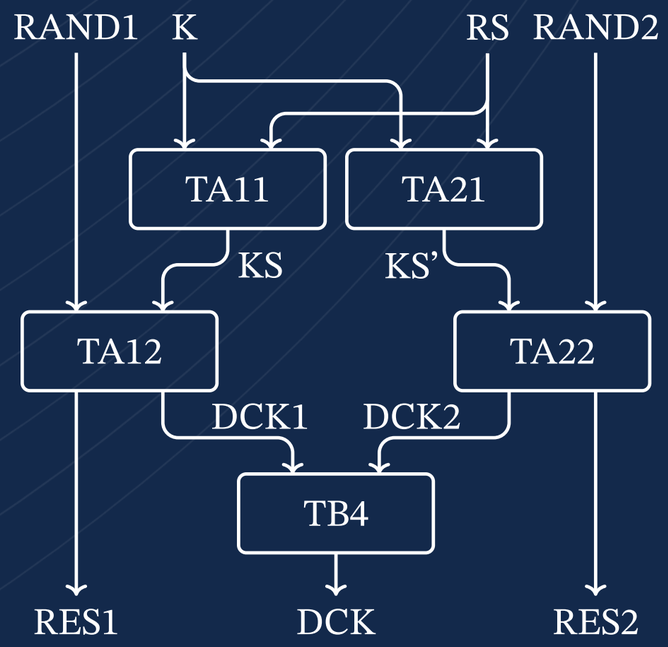


```
DCK = TB4(TA12(TA11(K, RS), RAND1), TA22(TA21(K, RS), RAND2))
```

CVE-2022-24400 DCK pinning attack

- We can simplify the authentication procedure now that we know primitives

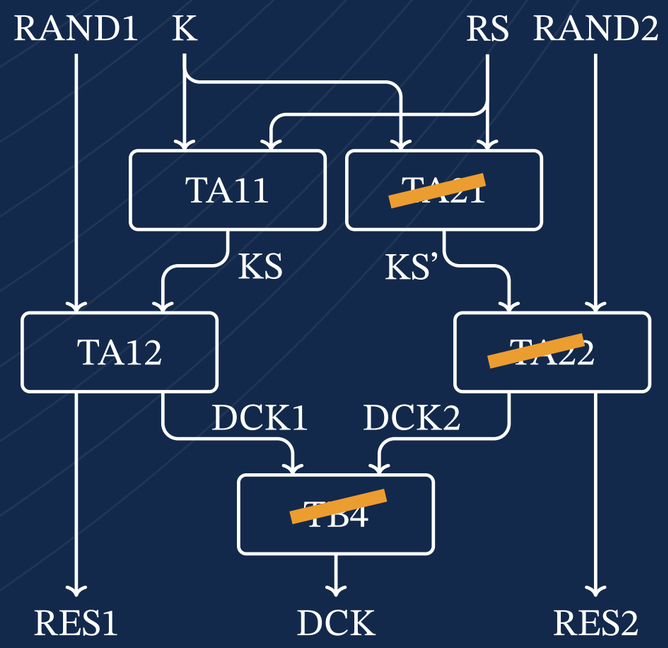

TA11(K, reverse(RS))

TA12

XOR

```
DCK = TB4(TA12(TA11(K, RS), RAND1), TA22(TA21(K, RS), RAND2)))
 equals
DCK =     TA12(TA11(K, RS), RAND1) ^ TA12(TA11(K, reversed(RS)), RAND2)
```

CVE-2022-24400 DCK pinning attack

- **Assume we impersonate infrastructure and:**
  - reversed(RS) = RS ("palindrome")
  - Predict MS challenge RAND2, use it as RAND1 as well
- Then, DCK simplifies to:

```
DCK = TA12(TA11(K, RS), RAND2) ^ TA12(TA11(K, RS), RAND2)
  equals
DCK = XOR(X, X) = 0 ← ALL ZERO KEY
```

- Authenticated channel with radio,
  intercept uplink, post-auth functionality, etc.

Identity encryption

- **Part of TAA1, called TA61**
- **Encrypts 24-bit TETRA addresses**
  - encrAddr = TA61(addr)
- **Pseudonymity, not anonymity**
  - Encrypted identities change only when network key changes
- ***Implementation disclosed in December..***
  - *Following serious concerns raised by stakeholders*

 All Right Reserved

CVE-2022-24403 De-anonymization

- *Intermediate secret* c is derived from CCK using HURDLE
  - Full details in December
- TA61 is vulnerable to *meet-in-the-middle* attack
  - Recovers value of c
  - Complexity: 2^{48} with 3 identity pairs
  - 1 min on laptop
  - Then, instant deanonymization
- Also: attack on HURDLE could be catastrophic now…
  - **CCK recovery?**

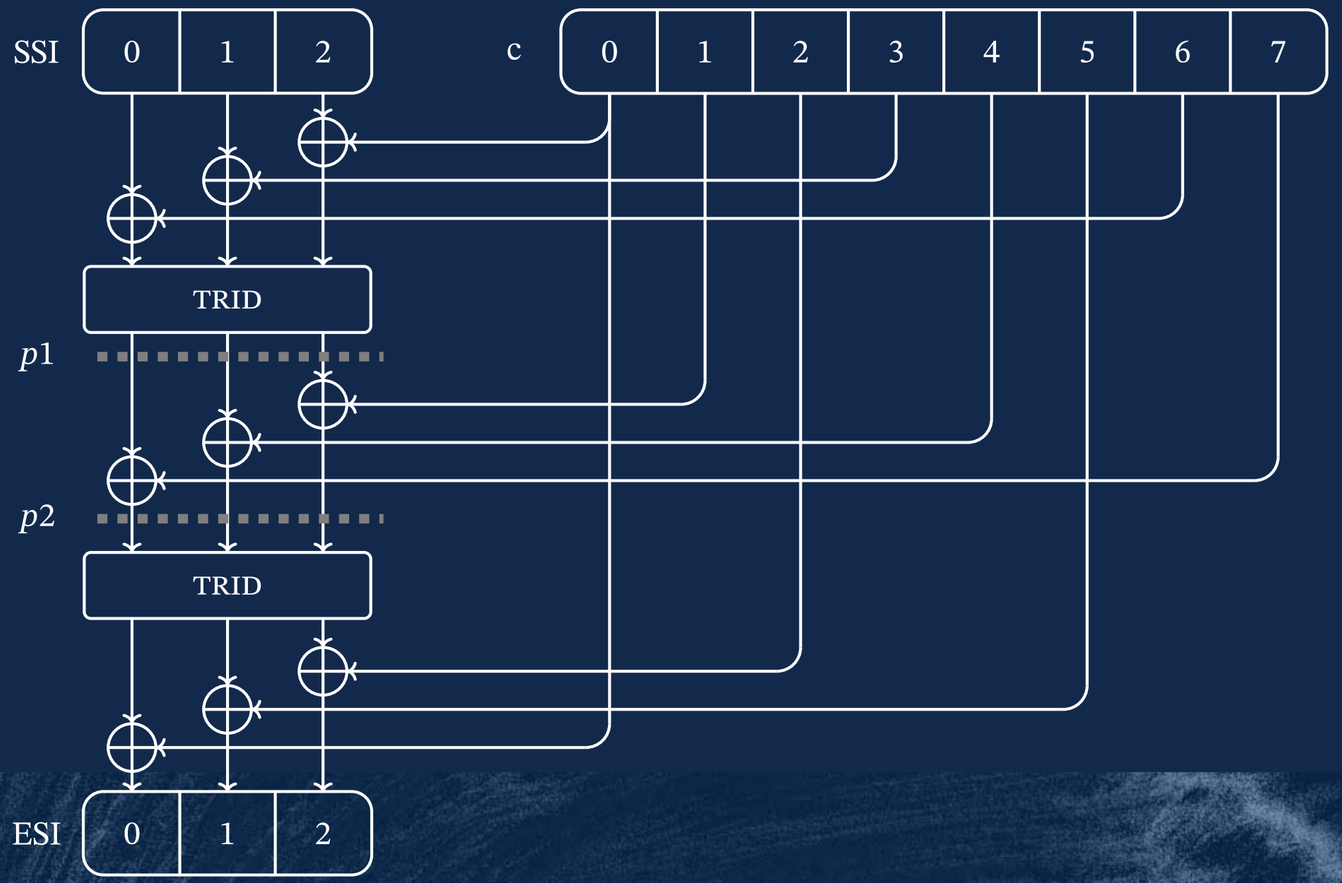

De-anonymization Scenario

- **Contextualize**
  - Correlate identities with observed units
  - Identity ranges allocated to user groups
- **Build live tracking map**
  - Counter-intelligence (unmask covert surveillance units)
  - Early warning (of e.g. police intervention)
- **Convenient**
  - Raspberry Pi + RTL-SDR dongle can be spread for geographic coverage
  - Fully passive, so stealthy!



TEA Keystream generators

- Used for air interface encryption
- All KSGs have similar structure
- TEA2 seems robust*
  - We are not cryptographers
  - Public scrutiny needed!

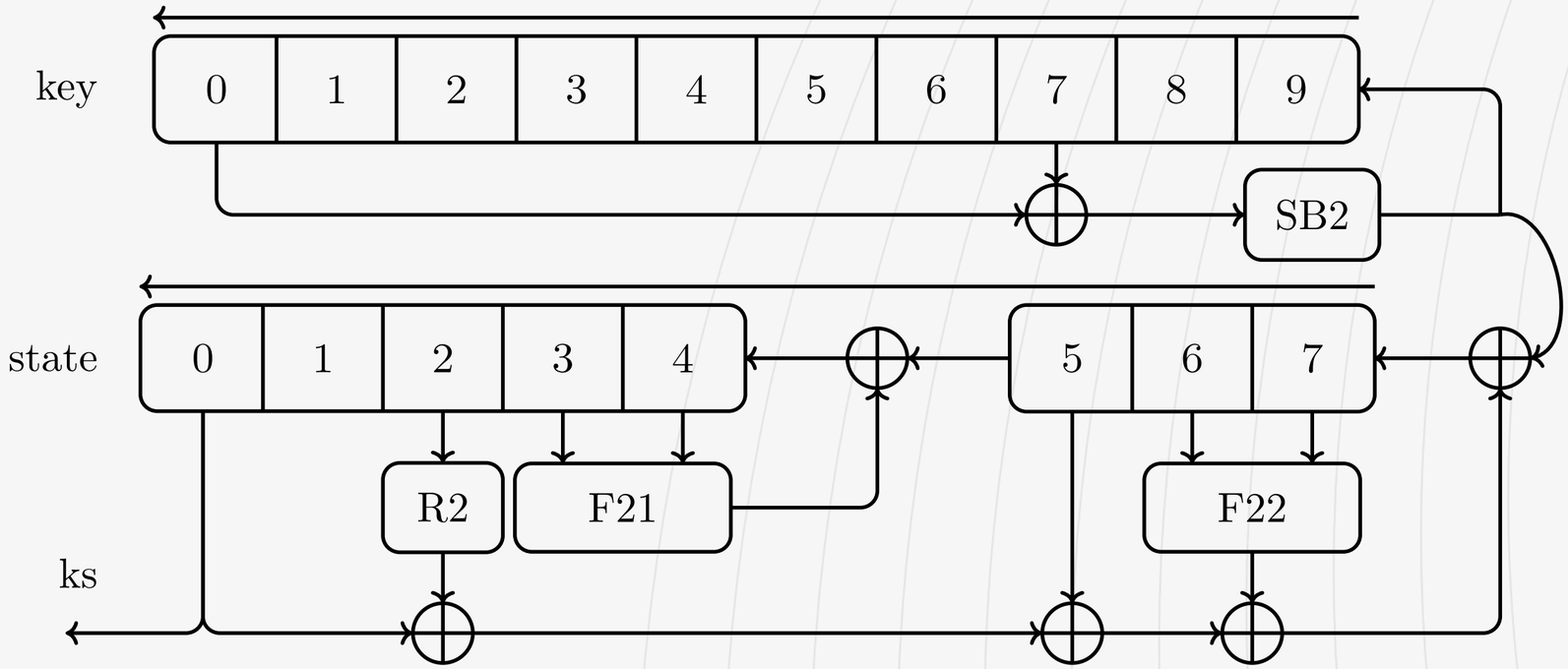

Pictured: TEA2

CVE-2022-24402 TEA1 backdoor

- **Target audience**
  - Private security, “less friendly” police / mil
  - .. But also, power, water, oil & gas
- **Advertised with 80-bit key**
  - Readily exportable but no hard indication on actual security (56-bit? 40-bit? 32-bit?)
- **Has “key initialization” function**
  - Reduces 80-bit key into 32-bit register
- **Trivial passive brute force (<1min)**
  - Intercept comms
  - Inject data (SCADA WAN!)

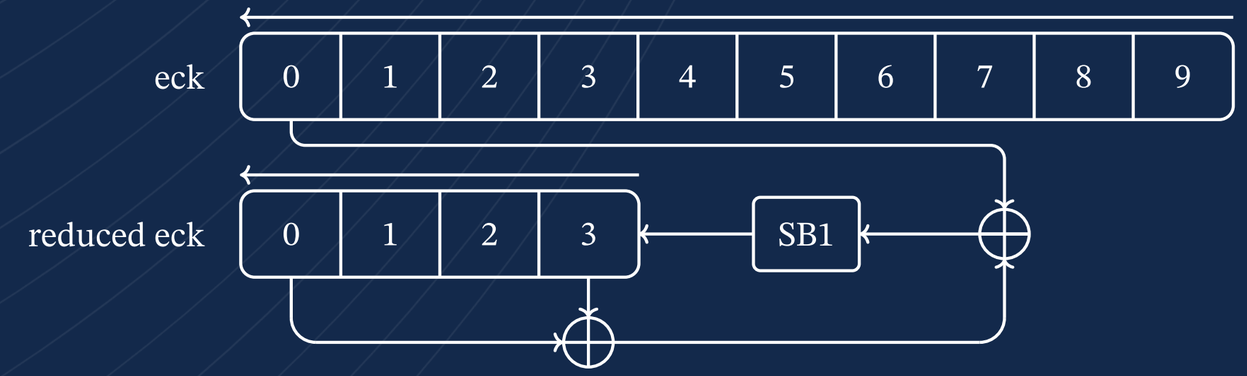

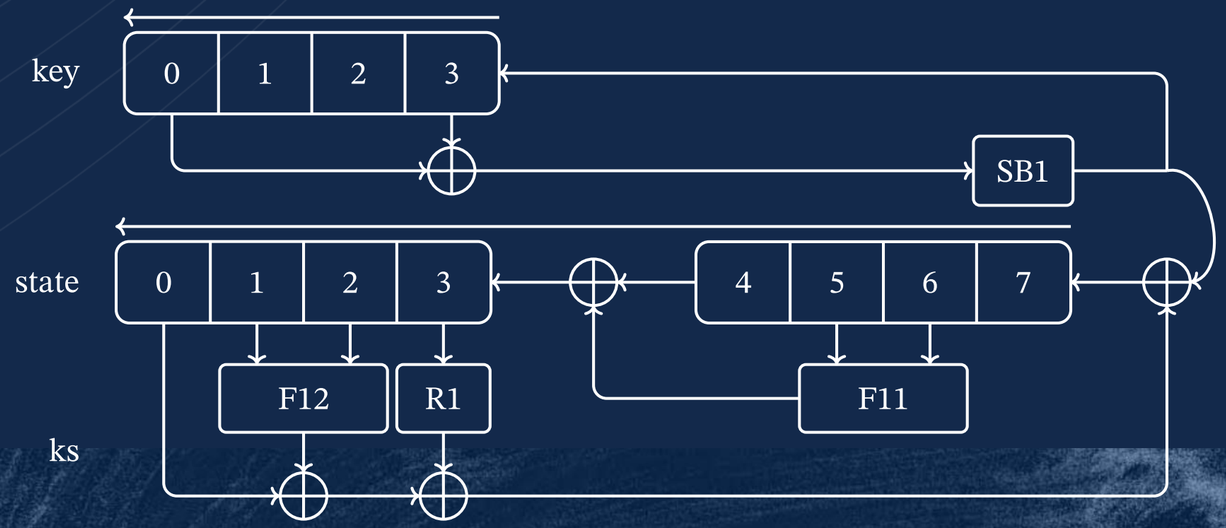

Demo: CVE-2022-24402

TEA1 Attack

NVIDIA GTX 1080

State-of-the-art... consumer hardware... in 2016...



"**BM**: The researchers found that they were able to decrypt messages from this, using a **very high-powered graphics card** in about a minute."[1]

"**BM**: I suppose all I can say is that **25 years ago the length of this algorithm was probably sufficient to withstand brute-force attacks**.
KZ: You're saying 25 years ago 32 bit would have been secure?
BM: I think so. I can only assume."[1]

"**BM**: I would say it's vulnerable if you happen to be an expert and have some **pretty reasonable equipment**."[1]

[1] Interview between Kim Zetter and Brian Murgatroyd, Chair of ETSI TC TETRA
https://zetter.substack.com/p/interview-with-the-etsi-standards

- Let’s not assume

- Let’s not assume
- Let’s not use reasonable equipment

Toshiba Satellite 4010CDS



- Let’s not assume
- Let’s not use reasonable equipment
- Let’s go back to 1998!
  - 266 MHz Pentium II
  - 4.1 billion byte hard disk
  - 32MB SDRAM

Demo: Party like the ‘90s

Air Interface Encryption

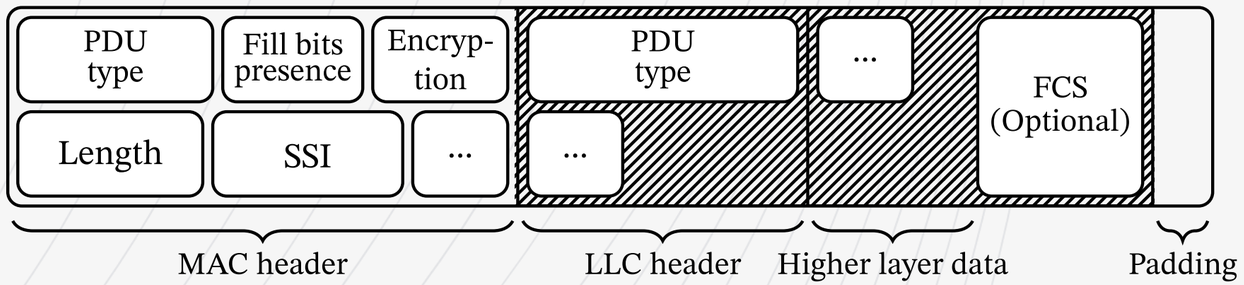

- Air interface signalling is encrypted
- MAC header is unencrypted*
- LLC header and further payload gets encrypted by TEAx keystream generator (KSG)
- TETRA messages have no cryptographic auth/integrity guarantee
  - CRC16 on lower MAC layer
  - Optional CRC32 on LLC layer

Air Interface Encryption

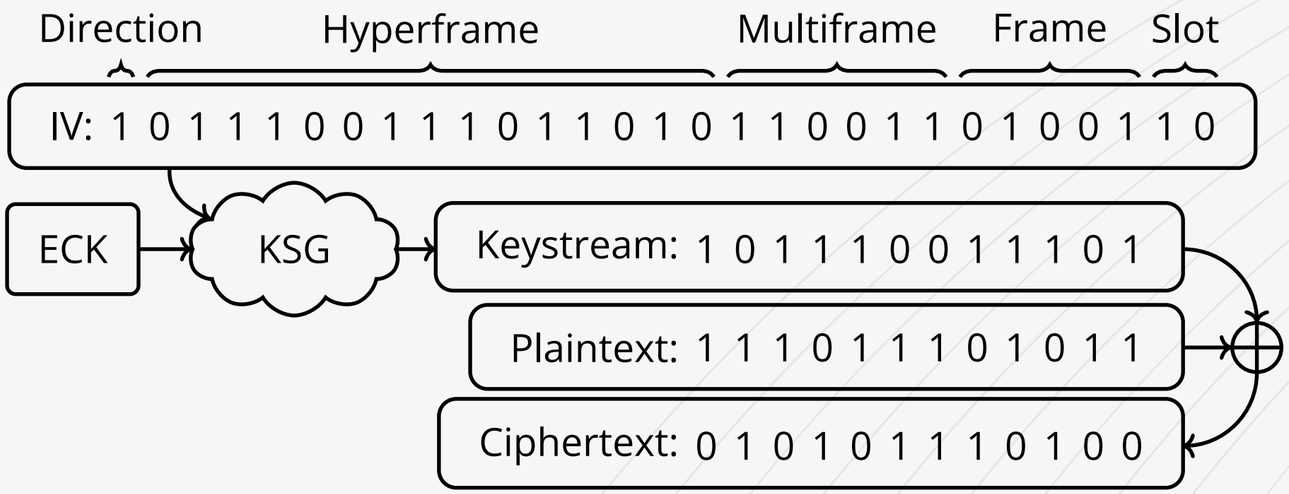

- **TEAx keystream generators depend on key and on network time**
  - Need to guarantee different keystream is used each time
- **Network time broadcast in unencrypted, unauthenticated manner**
  - SYNC and SYSINFO frames
- **As mentioned; no further *cryptographic* integrity checks**
  - Any encrypted data is taken at face value

CVE-2022-24401 Keystream recovery attack

- Attacker can overpower infrastructure and alter MS perception of time
- MS will then use keystream that fits the attacker specified network time
- Works regardless of TEA used, regardless of ‘network authentication’

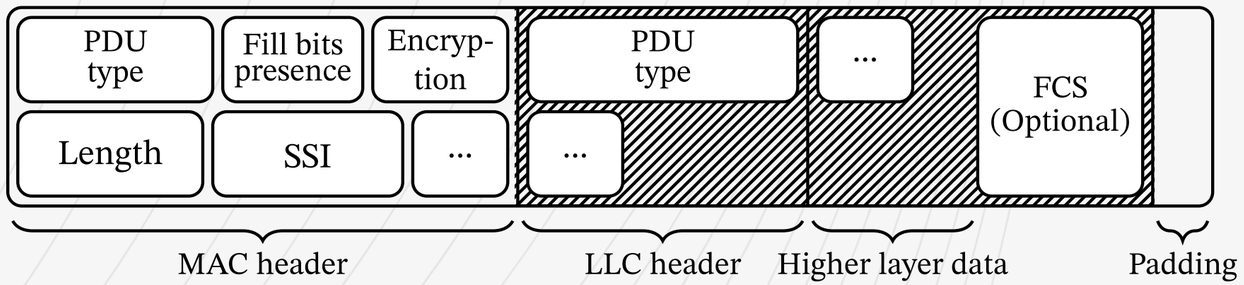

Attack outline

Attack outline:

- Capture interesting encrypted message at time T
- Target MS (any, with same keys)
- Overpower legitimate signal
- Set MS time to time T
- *Somehow recover keystream for that time*
- …
- Profit

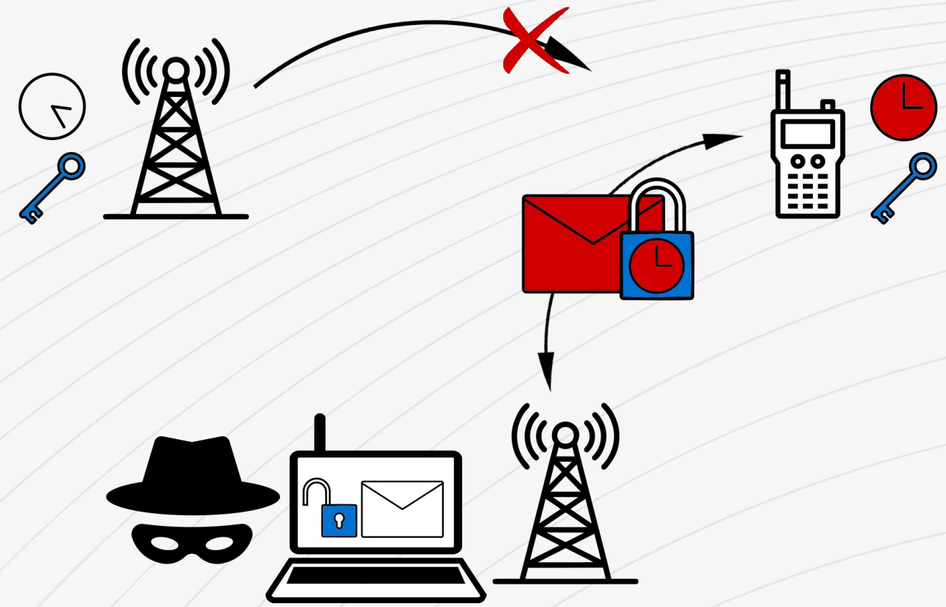

Recovering keystream

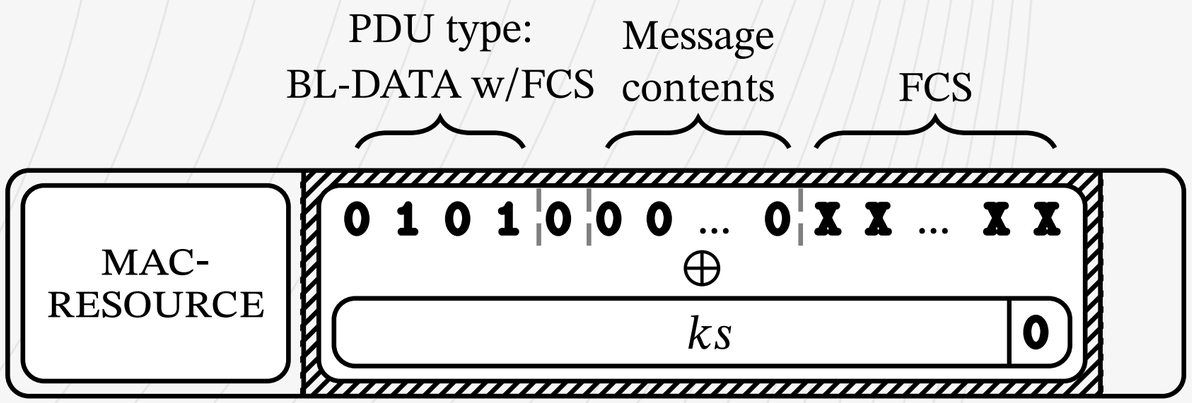

- **Assume we have n bits of keystream for time t. Construct message such that:**
  - It is of length n+1
  - It has an FCS
  - It needs an ACK from the MS
- **Encrypt, guess last ks bit is zero**
- **Send to MS**
- **If MS ACKs: FCS was good**
  - Found keystream bit n+1 = 0
  - If no ACK: keystream bit n+1 = 1
- **Repeat**

Bootstrap

- We need *seed keystream*
- Send 16 messages
  - `00000`, `00010`, …, `11110`
  - Will be decrypted by MS
- Only one will get ACK from MS
  - BL-DATA w/o FCS
  - Other messages are longer or unACKed
- Recovered 4 bits of ks ☺

From 4 to 37 bits

- Recover 4 bits for 10 slots
- Craft aforementioned message with FCS (min 37 bits)
- Use MAC fragmentation to distribute over the 10 slots
- Grow keystream knowledge for any slot of interest by guessing next ks bit

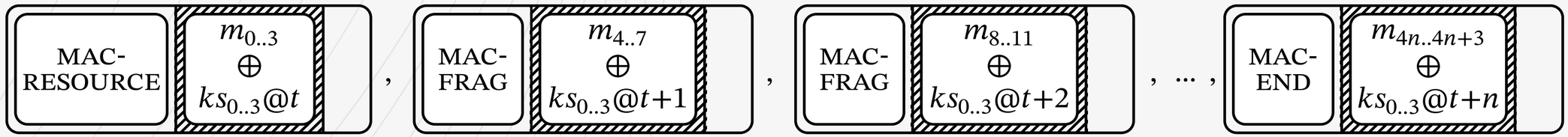

Intermezzo: ETSI

- **“Theoretical attack”**
- **Okay, so, can we have a base station to prove practicality?**
  - Haha lol no
  - More stakeholders responded like this
- **What do we do now?**
  - Implement TETRA infra stack for SDR?
  - Sounds like a lot of work…

Motorola MBTS

- Old
- Heavy
- Clear (no TEA)
- Cool as f*ck 💪
- Turn it into an attack platform!

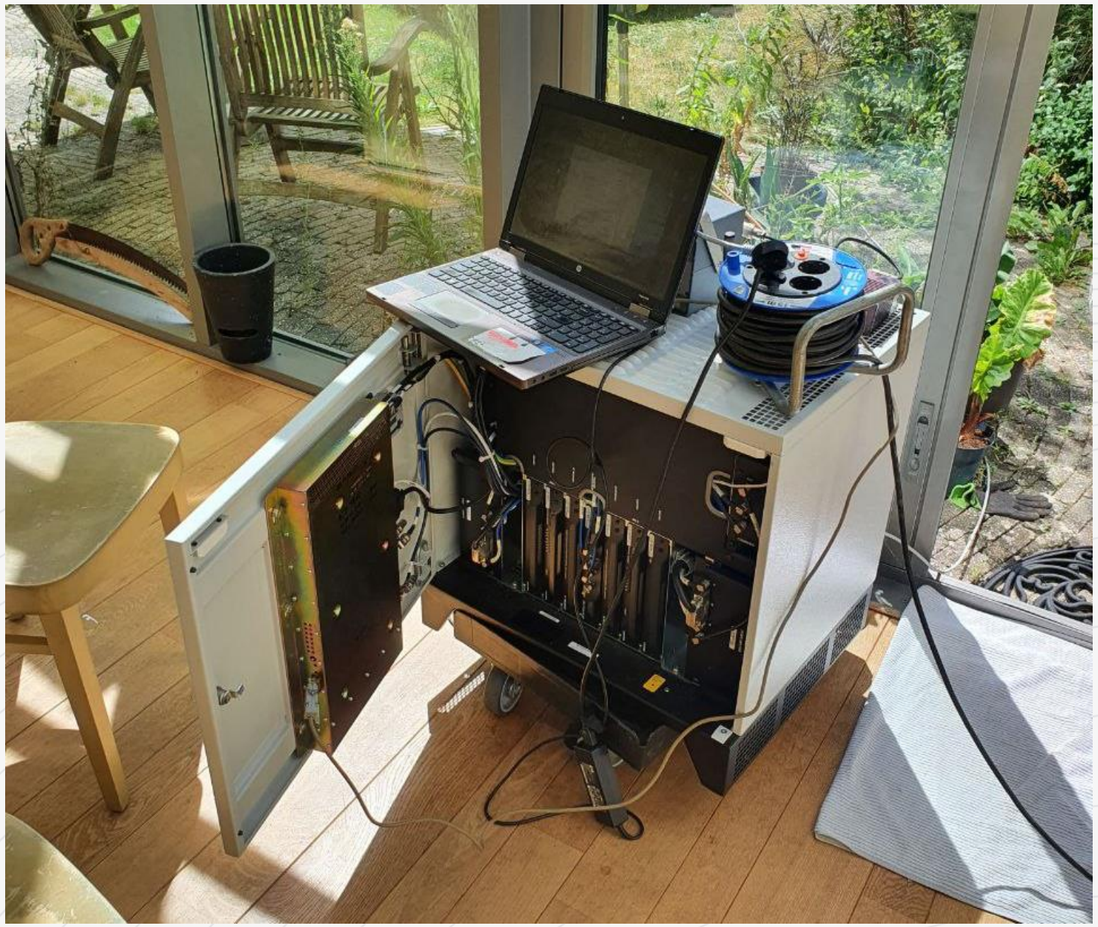

Motorola MBTS

- Two components
  - Site Controller: high level stuff
  - Base Radio: crypto
- pSOS+/PowerPC
- Serial management consoles
- Unsigned firmwares

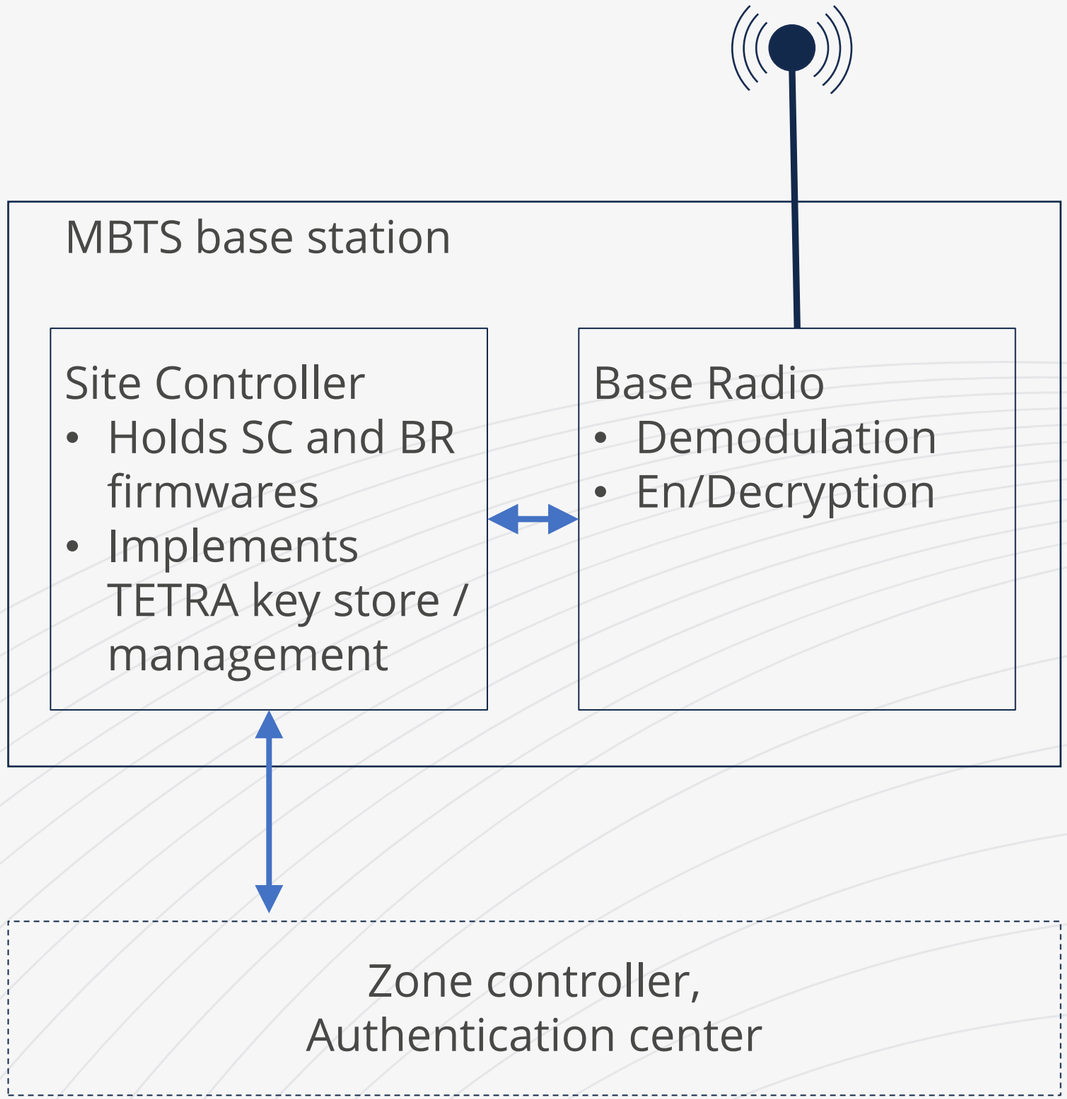

 All Right Reserved

Base Station Hacking

- **Modified firmwares to allow for keystream oracle attack validation**
- **Added `.tinker` command to fw**
  - Raw memory r, w, x, and malloc primitives
- **Added TEA support**
  - Based on our on reference implementation
- **Wrote hooking/patching framework**
  - Loads our modules in memory
  - Logic for hooking/cleanup
- **Implanting base stations = ez**

PoC II gtfo

- **Wrote `.ksreuse` module**
  - Implements sudden changes of network time and a way to recover keystream
- **Our MTM5400 rebooted..**
  - Run into some synchronization issues, resolved by aligning time changes to 4 multiframes
  - Can be resolved, but would be beyond PoC
- **Some more tinkering…**
  - .. and the MTM gladly accepts any jumps in network time

MBTS vulns

- **Unauthenticated firmwares**
  - Problematic for mission critical comms
  - Allows for key exfiltration or persistent implants
- **Hardcoded undocumented backdoor password**
  - .. at god-mode auth level
- **Crash = drop to debug shell**
  - AKA crash = code execution
- **… Seems there is some kind of industry-wide issue**
  - Similar things in newer BTSes / Mses
  - Is anyone pentesting TETRA equipment?!

Demo: CVE-2022-24401

Keystream recovery attack

ETSI's official statement?

"The research uncovered some general areas for improvement in the TETRA protocol"[1]

[1] ETSI and TCCA Statement to TETRA Security Algorithms Research Findings Publication on 24 July 2023
https://www.etsi.org/newsroom/news/2260-etsi-and-tcca-statement-to-tetra-security-algorithms-research-findings-publication-on-24-july-2023

TEA3 quirk

- **Sbox not a permutation**
  - Duplicate entry
    - Flip bit → matches properties of other TEAs
  - Key register feedback structure slightly different, hides the issue
  - Highly unusual, certainly not positive
  - Unlikely to be accidental
    - Interoperability, feedback structure
- **Impact unclear**
  - Could not find practical attack
  - **Public scrutiny needed!**

	00	01	02	03	04	05	06	07	08	09	0a	0b	0c	0d	0e	0f
00	7D	BF	7B	92	AE	7C	F2	10	5A	0F	61	7A	98	76	07	64
10	EE	89	F7	BA	C2	02	0D	E8	56	2E	CA	58	C0	FA	2A	01
20	57	6E	3F	4B	9C	DA	A6	5B	41	26	50	24	3E	F8	0A	86
30	B6	5C	34	E9	06	88	1F	39	33	DF	D9	78	D8	A8	51	B2
40	09	CD	A1	DD	8E	62	69	4D	23	2B	A9	E1	53	94	90	1E
50	B4	3B	F9	4E	36	FE	B5	D1	A2	8D	66	CE	B7	C4	60	ED
60	96	4F	31	79	35	EB	8F	BB	54	14	CB	DE	6B	2D	19	82
70	80	AC	17	05	FF	A4	CF	C6	6F	65	E6	74	C8	93	F4	7E
80	F3	43	9F	71	AB	9A	0B	87	55	70	0C	AD	CC	A5	44	E7
90	46	45	03	30	1A	EA	67	99	DB	4A	42	D7	AA	E4	C2	D5
a0	F0	77	20	C3	3C	16	B9	E2	EF	6C	3D	1B	22	84	2F	81
b0	1D	B1	3A	E5	73	40	D0	18	C7	6A	9E	91	48	27	95	72
c0	68	0E	00	FC	C5	5F	F1	F5	38	11	7F	E3	5E	13	AF	37
d0	E0	8A	49	1C	21	47	D4	DC	B0	EC	83	28	B8	F6	A7	C9
e0	63	59	BD	32	85	08	BE	D3	FD	4C	2C	FB	A0	C1	9D	B3
f0	52	8C	5D	29	6D	04	BC	25	15	8B	12	9B	D6	75	A3	97

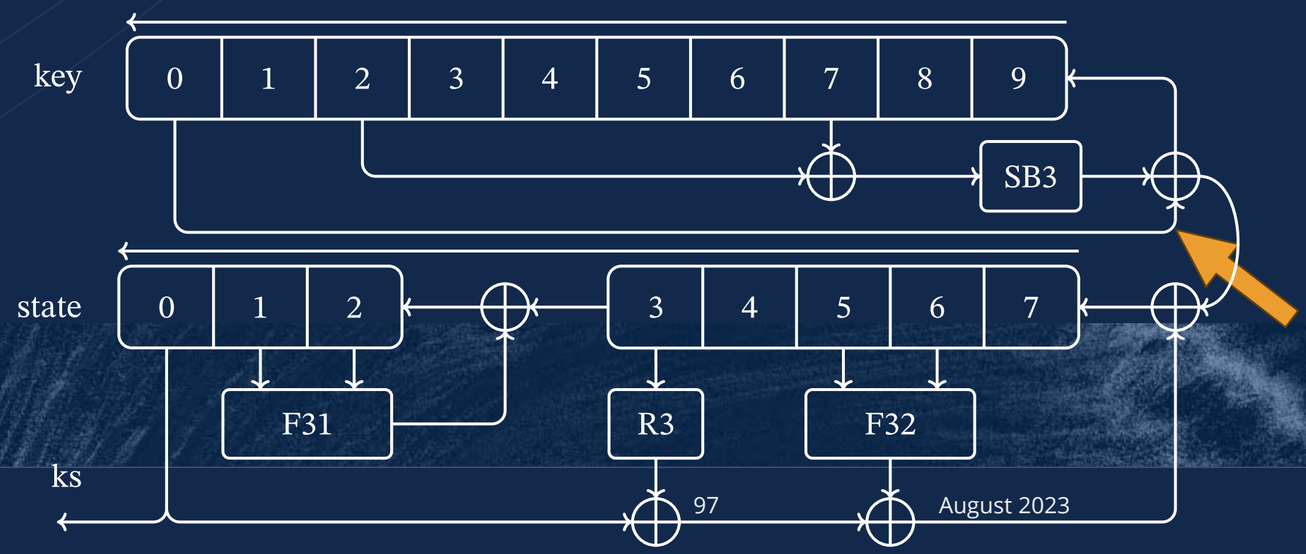

Coordinated Vulnerability Disclosure

Timeline

01-2021	• Started work on the RETETRA project
12-2021	• First contact NCSC-NL
01-2022	• First meeting Dutch police
01-2022	• First meeting ETSI
01-2022	• First meeting intelligence community
02-2022	• Detailed preliminary advisory distributed
'22/'23	• Further advisory info & mitigations distributed to stakeholders • Coordinated publication timeline

Mitigations

CVE	Description	Recommended Mitigation	Compensating Controls
CVE-2022-24401 CVE-2022-24404	Keystream recovery attack	• Firmware updates • E2E • (data) TLS / IPsec	• Renew keys frequently • Risk assessment, adjust OPSEC
CVE-2022-24402	TEA1 backdoor	• TEA2 • E2E • (data) TLS / IPsec	• Assume TEA1 == cleartext • Risk assessment, adjust OPSEC
CVE-2022-24403	Deanonymization attack	• Migrate to TAA2	• Risk assessment, adjust OPSEC
CVE-2022-24400	DCK key pinning attack	• Firmware updates • Migrate to TAA2	• Disable radios with unacceptable FW update rollout timelines



Aftermath

Hold on…

"**BM:** And I would expect that anybody … who need a lot of protection would not just be using TEA1. Within Europe… I would suggest that anyone who needed high security would be using TEA2. …. The problems generally are that TEA2 is only licensed for use within Europe by public safety authorities."[1]

- **What's this "Europe" you speak of?**
  - Poland, Bulgaria, Croatia, Montenegro, Moldova
  - All (candidate) EU states
- **Allowed to use TEA2 according to ETSI's own standards[4]**
  - As far back as 2003 or 2008
- **Yet…**
  - **Tenders show TEA1 equipment was procured by *all* for police/military in last 5 years[2,3]…**

[1] Interview between Kim Zetter and Brian Murgatroyd, Chair of ETSI TC TETRA
https://zetter.substack.com/p/interview-with-the-etsi-standards
[2] https://www.volkskrant.nl/nieuws-achtergrond/overheid-weet-al-dertig-jaar-van-achterdeur-in-beveiliging-radiocommunicatie~bcefc760/
[3] https://www.o2.pl/informacje/niepokojace-informacje-luka-w-systemie-tetra-niech-ktos-cos-zrobi-6923376203832288a
[4] https://www.etsi.org/deliver/etsi_tr/101000_101099/10105302/02.01.01_60/tr_10105302v020101p.pdf
https://www.etsi.org/deliver/etsi_tr/101000_101099/10105302/02.02.02_60/tr_10105302v020202p.pdf
https://www.etsi.org/deliver/etsi_ts/101000_101099/10105302/02.03.01_60/ts_10105302v020301p.pdf

 All Right Reserved

"**KZ:** Do you think TEA1 is secure enough to be used for critical infrastructure?

BM: Hah. Well that's a yes-no question to a complex subject isn't it? I think … it depends who's attacking it and whether high-value targets … are using TEA1. And the trouble is, the world has changed … in the last couple of years … where you could have attacks on things like pipelines and other things connected by telemetry. And if they're using TEA1, well we know that certainly a government actor could have a go at them in a sort of short order. Because that's exactly what the researchers have proved."[1]

- **Not a lot of choice**
  - Can't get TEA2/TEA3, no TETRA E2EE for RTUs…
  - RTUs may not support TLS / IPsec
  - Vendors may not see need … (have TEA1!)

- **Even if they could, changing this in the field is often infeasible or impossible[2]…**

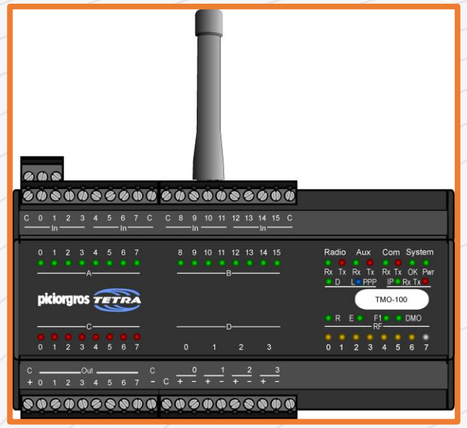

The TMO-100 is shipped with TEA1 Air Interface Encryption capabilities as default. A different TEA version (TEA2 or TEA3) must be requested with the initial order! TEA methods can't be changed in the field!

[1] Interview between Kim Zetter and Brian Murgatroyd, Chair of ETSI TC TETRA https://zetter.substack.com/p/interview-with-the-etsi-standards

[2] TMO100V3 User Guide (2021)

Maybe nobody targets TETRA networks?

"**KZ:** But is that in the best interest of the public that are using these algorithms?

BM: Well it's a moot point isn't it, really. That's a difficult thing to say "yes it's to the benefit of the public or not." There's no evidence of any attacks on … TETRA that we know of."[1]

"ETSI and TCCA are not at this time aware of any exploitations on operational networks."[2]

2 out of 5 attacks are passive so… 🤔

[1] Interview between Kim Zetter and Brian Murgatroyd, Chair of ETSI TC TETRA
https://zetter.substack.com/p/interview-with-the-etsi-standards

[2] ETSI and TCCA Statement to TETRA Security Algorithms Research Findings Publication on 24 July 2023
https://www.etsi.org/newsroom/news/2260-etsi-and-tcca-statement-to-tetra-security-algorithms-research-findings-publication-on-24-july-2023

 All Right Reserved

Right…

Snowden leaks show joint NSA & ASD project to collect Indonesian police TETRA comms during U.N. climate change conf in Bali 2007[1]

Not proof of TETRA:BURST exploitation specifically – but proof of *active TETRA targeting*

TOP SECRET//COMINT//REL TO USA, FVEY//20320108

(S//SI//REL) SIGDEV Efforts in Support of the United Nations Framework for Climate Change Conference, Bali, Indonesia

POCs: [redacted]

(U) The United Nations Framework Climate for Change Conference (UNFCCC), held in Bali, Indonesia from 3-14 December, was attended by10,000 conferees, activists, journalists, and high ranking representatives from 190 countries, including the newly elected Australian Prime Minister, Mr. Kevin Rudd, the U.S. Secretary of State, and former U.S. Vice President Al Gore.

(S//SI//REL) Beginning on 29 November, the SIGDEV and Collection Operations Divisions executed a self-initiated network development effort, in coordination with the Defense Signals Directorate (DSD) and site leadership, in support of this target. The goal of the development effort was to gain a solid understanding of the network structure should collection be required in the event of an emergency. This involved identifying systems in use, isolating talk groups and TETRA towers of highest interest, determining network hierarchy, and reporting flow. Site produced a Telecommunications Information Report (TELIR) documenting network structure and activity. *(Please contact* [redacted] *if you would like a copy of the TELIR.)*

(S//SI//REL) Although DSD's initial collection requirements were only for UHF push-to-talk communications collected via remote operations in Canberra, RAINFALL proposed a more in-depth SIGDEV effort. To start, a communications externals (COMEXT) task was generated to rapidly survey 100–3300MHz. Using this data, site analysis identified a previously unknown TETRA trunk mobile network with towers in both Jakarta and Bali. With this information, site analysts began a focused TETRA network development effort, which resulted in the identification of Indonesian security forces (POLRI) communications at both locations. At DSD's request, site dedicated a staff member (a trained Indonesian linguist) to this effort to monitor, scan, and transcribe the TETRA voice communications in order to provide daily summaries of network activity. Intercept ranged from network set-up to situation reports. Highlights include the compromise of the mobile phone number for Bali's Chief of Police and demonstration routes.

[1] https://theintercept.com/document/nsa-telegraph-sigdev-efforts-in-support-of-the-united-nations-framework-for-climate-change-conference-bali-indonesia/

Right…

> Op QUITO (TSI): Following a couple OMGs and a significant amount of prep work, the planning phase of Op QUITO, an effects op to support FCO's goals relating to Argentina and the Falkland Islands, is almost complete. The plans are due to go to submission in the next month, and then this will hopefully lead to a long-running, large scale, pioneering effects operation.

Snowden leaks reveal GCHQ TSI '*effects operation*' QUITO against AR around Falklands/Malvinas oil exploration rights tensions in 2009[1]

Involved TETRA collects as part of military/leadership tasking

Not proof of TETRA:BURST exploitation specifically – but proof of *active TETRA targeting*

> **Argentina**
>
> TSI initiated and supported OH tasking against Argentina in efforts to collect high priority military and Leadership comms. Work was coordinated across the OH enterprise to obtain results when opportunity arose using US 903G and US 940C, MHS Ops were a main driver for this collection. Results included a number of TETRA collects and at least seven Argentinian PCM (digital) microwave emitters which were processed and geolocated. Although TSI haven't got desired results on their comms of interest as yet, this was a positive and encouraging team effort against this target in readiness for when next opportunity arises. Efforts between TSI and MHS continue.

[1] https://cryptome.org/2015/04/nsa-gchq-jtrig-intercept-15-0402.pdf

What's next?

- **ETSI announced update to standard**
  - TAA1 → TAA2
  - TEA{1,3} → TEA{5,7}
  - Keystream recovery mitigation*
- **Again: secret algorithms[2]!**

"**KZ:** If you're saying that the only reason they're secret is because the government has advised it, can ETSI decide on its own to make them public?
BM: I'd have to say yes.
KZ: So why don't you?
BM: I don't know."[1]

The specification for TEA6 consists of the following three parts:

Part 1:	Algorithm specification;
Part 2:	Design conformance test data;
Part 3:	Algorithm input/output test data.

The procedures described in the present document apply to Parts 1 and 2 of the specifications. Parts 1 and 2 are confidential for each of the algorithms.

[1] Interview between Kim Zetter and Brian Murgatroyd, Chair of ETSI TC TETRA https://zetter.substack.com/p/interview-with-the-etsi-standards
[2] ETSI TS 101 053-5, ETSI TS 101 053-6, ETSI TS 101 053-7

Should we trust TEA6/7?

What do you think?

Should we trust TEA6/7?

Let's ask ETSI!

"**KZ: Should we trust ETSI algorithms going forward**?
BM: I've no reason to believe you shouldn't.
KZ: But the public has a reason not to — the fact that they're secret.
BM: I can think of all sorts of algorithms that, over time, they become weak. And lots of them have been public ones as well. Sure, algorithm may not have a life of a quarter of a century that's for sure.... [But] **we have no reason to produce dodgy algorithms, if you like.**"[1]

"**BM:** We were just given those algorithms. **And the algorithms were designed with some assistance from some government authorities, let me put it that way**."[1]

"**BM: At the end of the day, it's down to the customer organization to ensure that things are secure enough for them. Now, I agree that's difficult with a private algorithm.** The manufacturer knows the length of the key, but it's not publicly available. **But the reason we have three different algorithms available must be clear to somebody that they're not all as secure as each other.**"[1]

[1] Interview between Kim Zetter and Brian Murgatroyd, Chair of ETSI TC TETRA
https://zetter.substack.com/p/interview-with-the-etsi-standards
NOTE: BM's comments refer to TEA1-4 but there is little reason to doubt their applicability to TEA5-7

Conclusion

- First public, in-depth TETRA security analysis (after 20+ years)
- Secret crypto algorithms reverse-engineered
- Multiple vulnerabilities uncovered (incl. backdoor)
- Implications for voice, data, and SCADA
- Patches available for some issues, mitigations for others

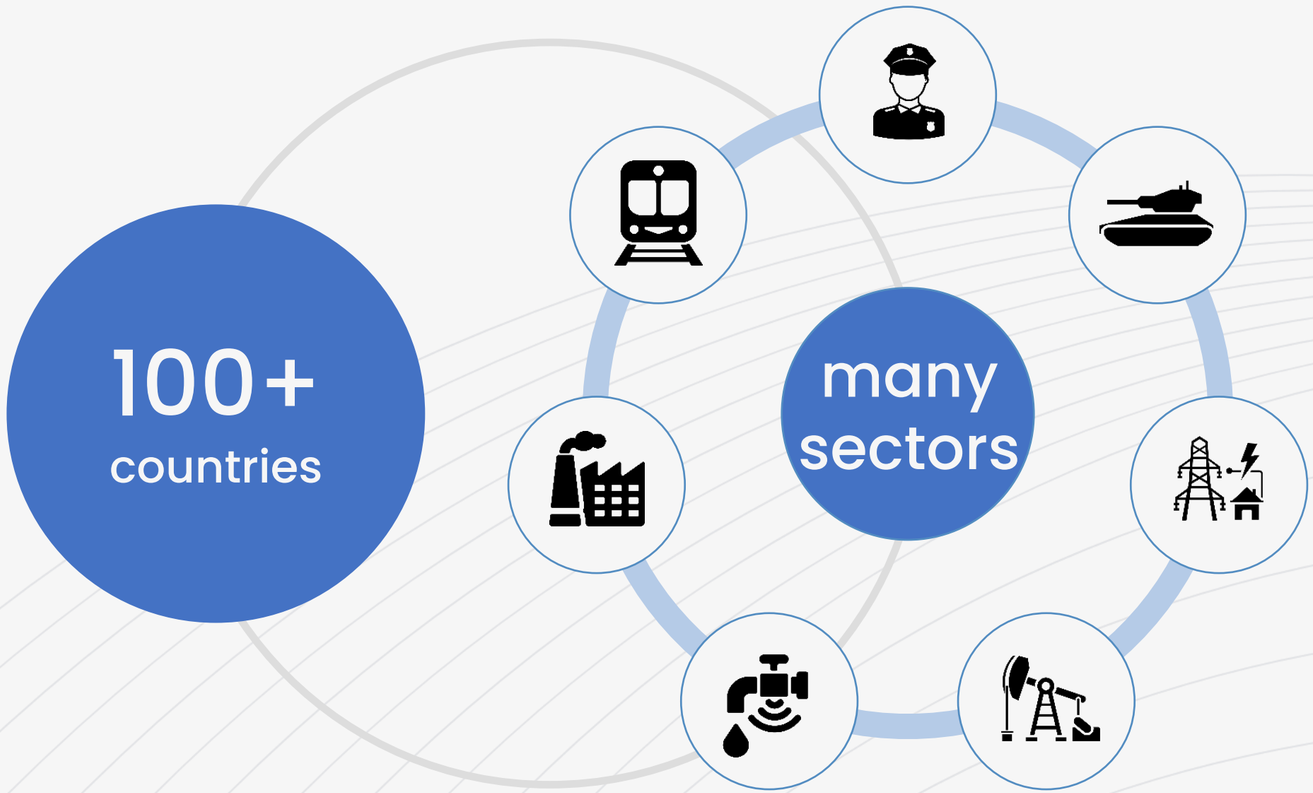

Call to Action

1. Take a closer look at the TEAs
   - Especially the TEA3 S-Box!
2. Take a closer look at HURDLE
   - An attack on HURDLE could be catastrophic due to attack on TA61
3. Implement / extend open TETRA stacks
   - Great work by OsmocomTETRA / SQ5BPF
   - .. Still lots to do, talk to NLnet, OsmocomTETRA
4. **Stop doing secret crypto please**
   - Looking at you, TEA{5,6,7} / TAA2...
   - Also looking at you, TETRA E2EE...

Questions?

Social

-

Web

- midnightblue.nl
- midnightblue.nl/retetra
- tetraburst.com

Contact

- c.meijer@midnightblue.nl
- w.bokslag@midnightblue.nl
- j.wetzels@midnightblue.nl