CREATING THE DEFCON CHINA 1.0 BADGE

joe Grand aka kingpin

introduction / badge history







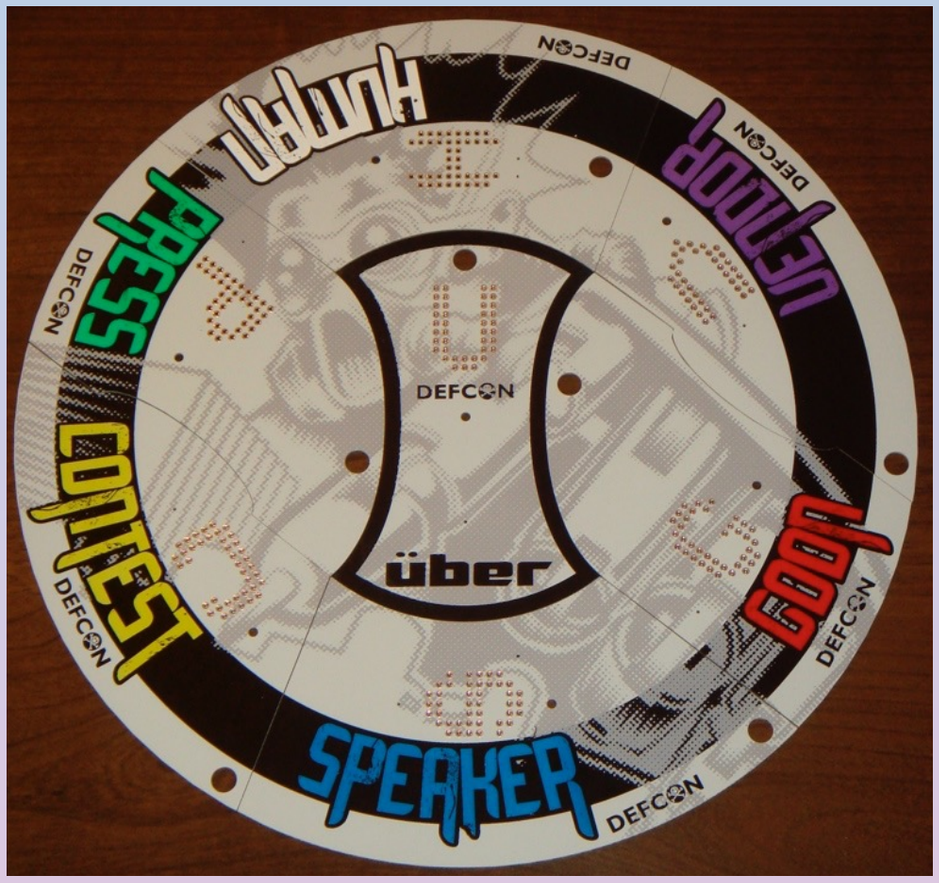
HUMAN
DEFCON
DEFCON
DEFCON

goals

- bring community together through interactivity
- create game to encompass the defcon experience
- simple design that could be expanded during/ after defcon
- interactive, command-based menu for additional exploration

gameplay

- complete tasks, get rewarded
- 4 roots and 4 branches, each with 4 leds
- when task is complete, badge inserted into programmer to unlock LED
- when each root is complete, magic happens
- when all roots are complete, more magic happens

early concepts

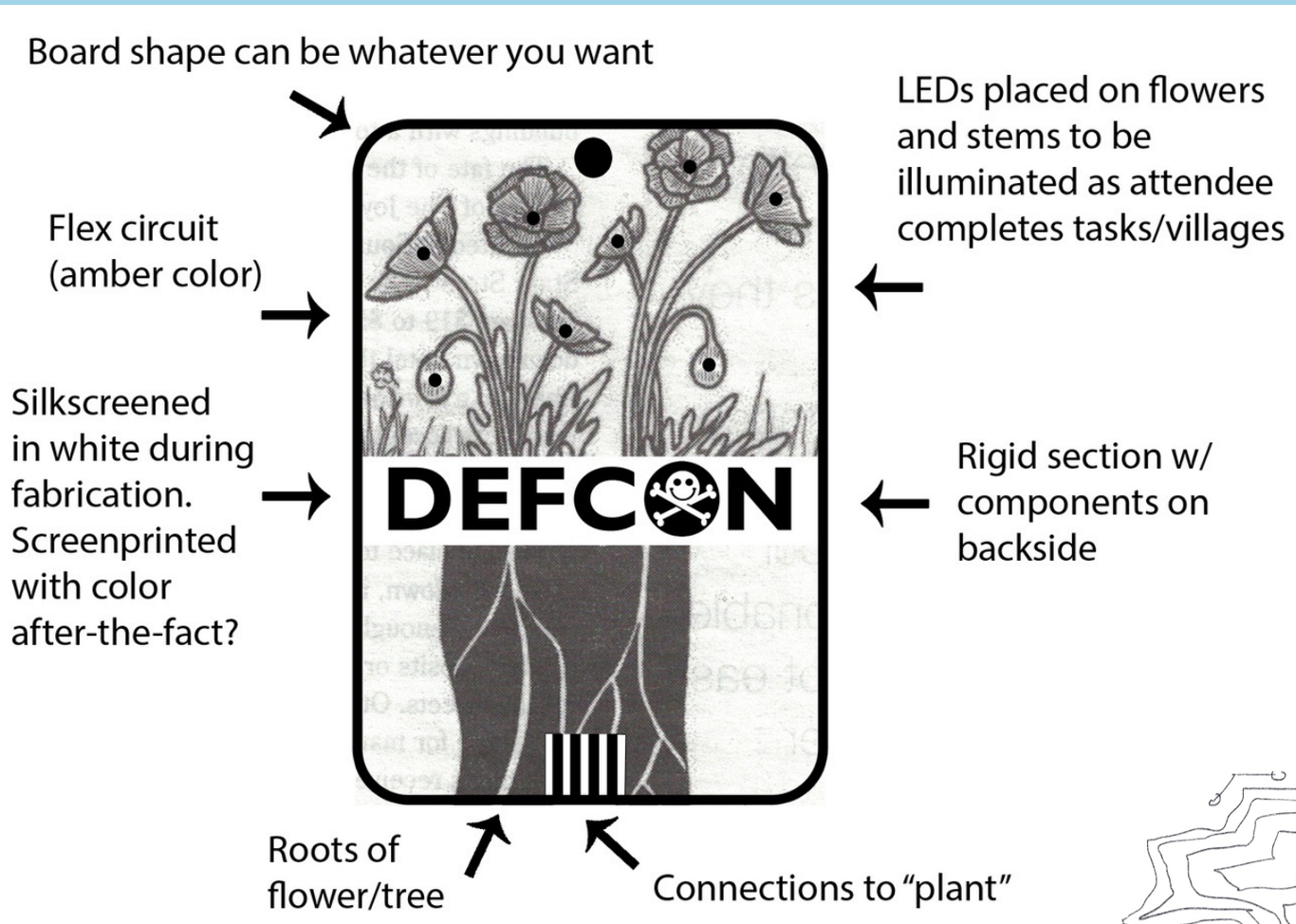

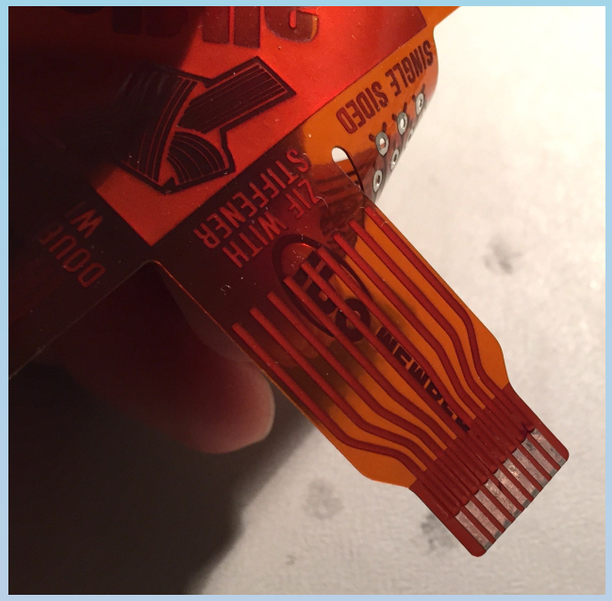

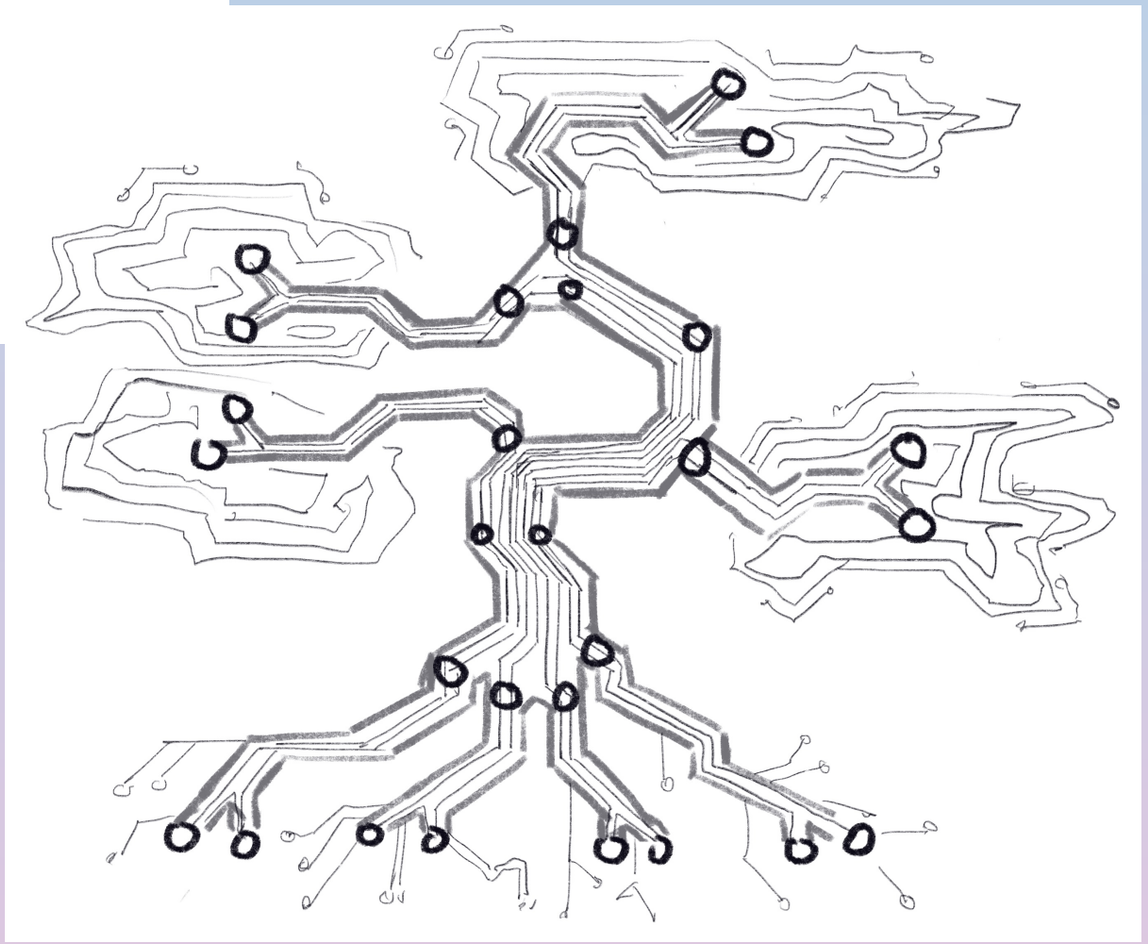

Prototyping

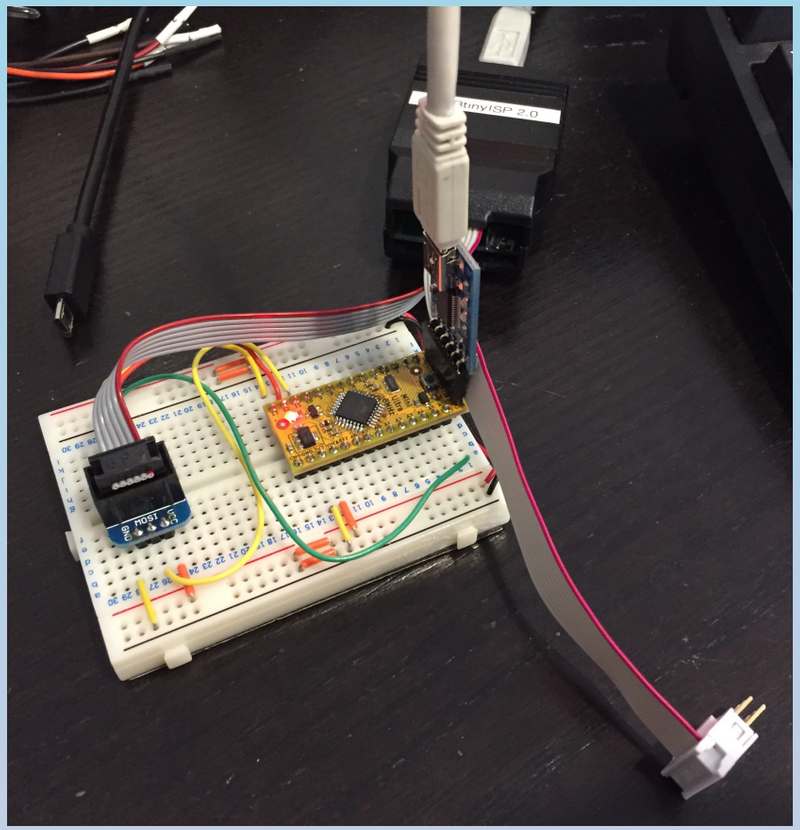

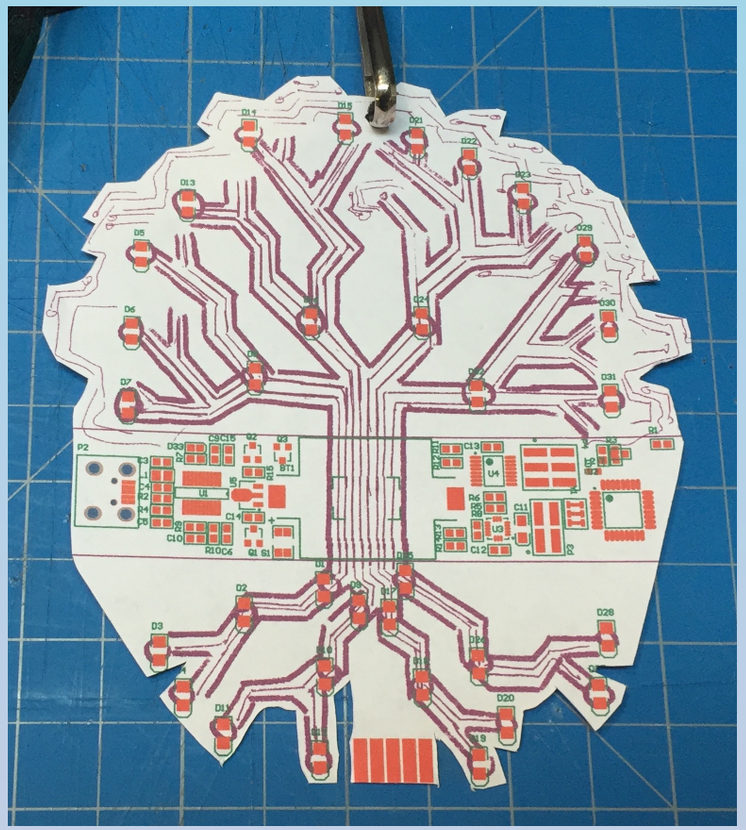



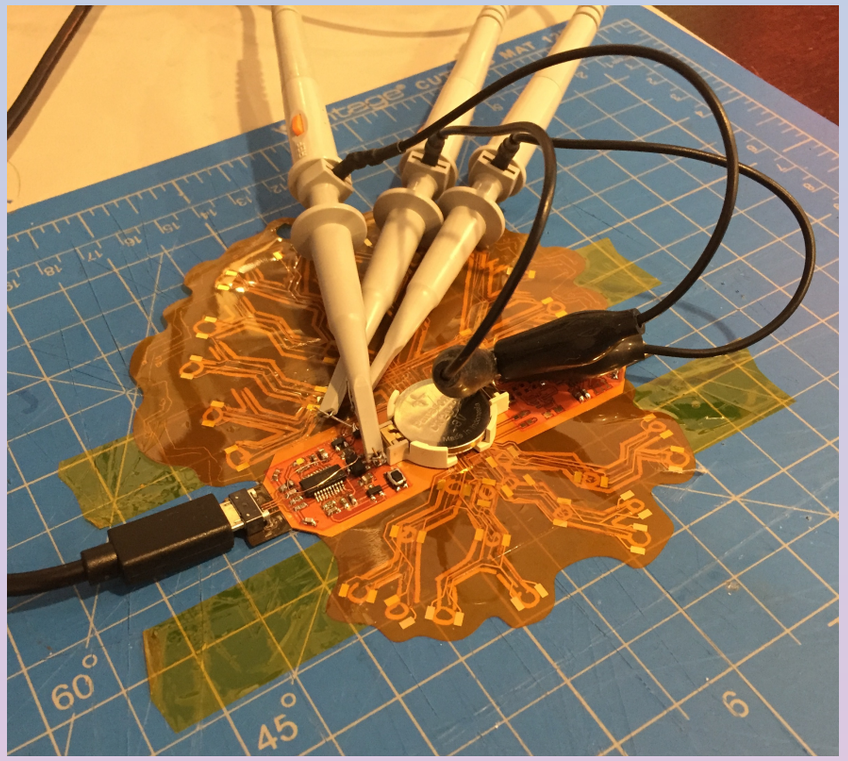

block diagram

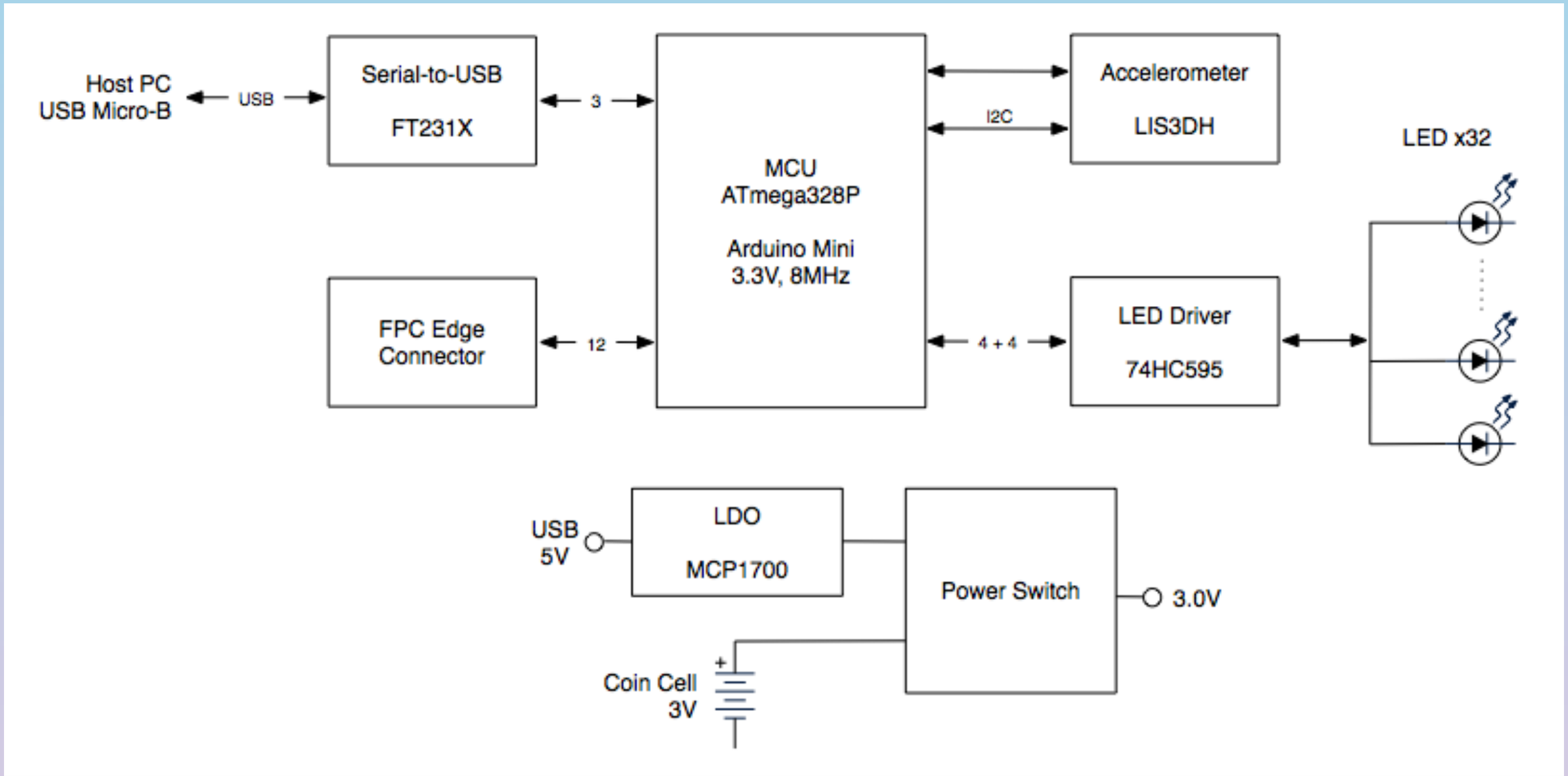

Hardware

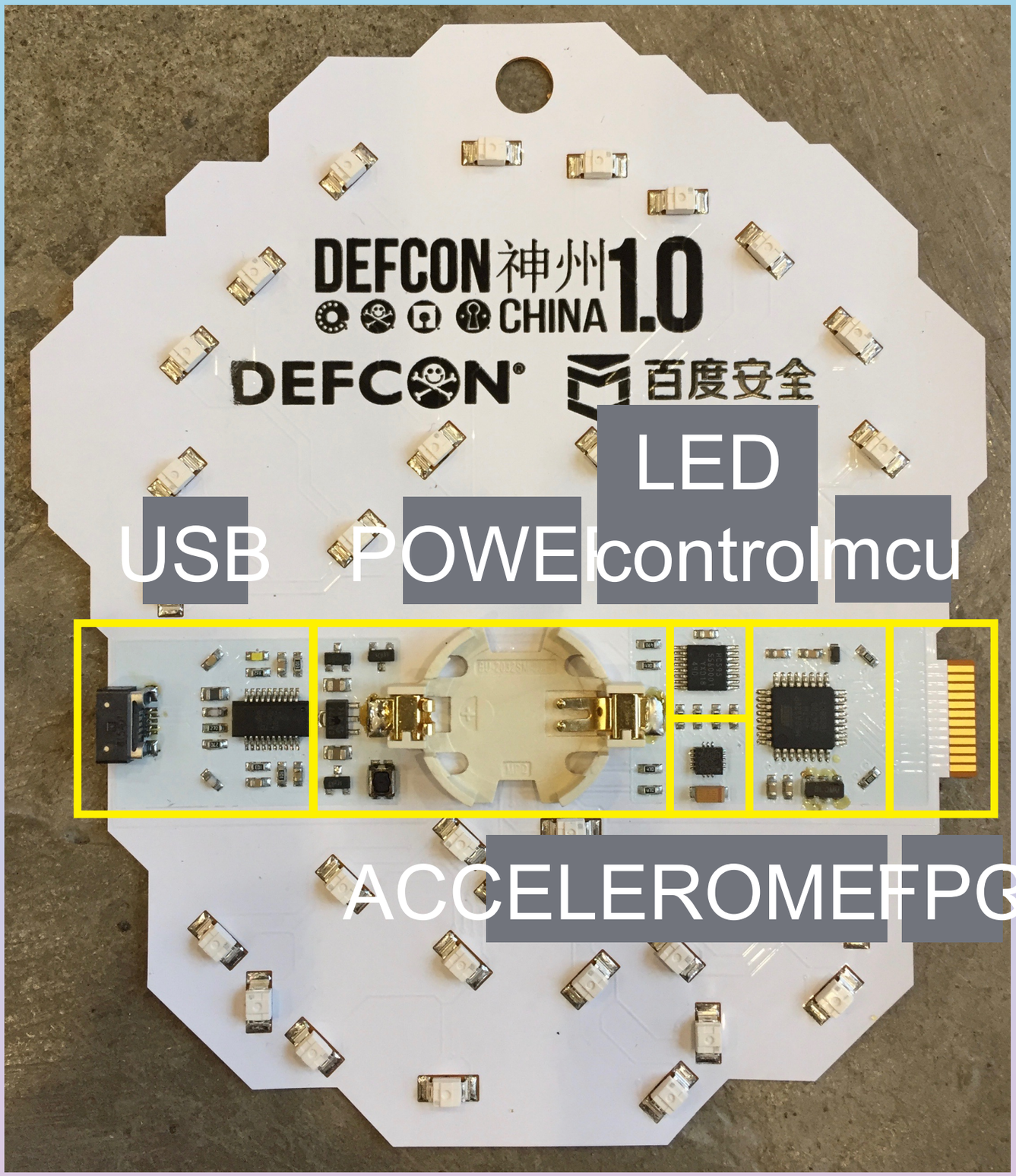
DEFCON 神州 1.0
CHINA
DEFCON
百度安全
LED
USB
POWE
control
mcu
ACCELEROME
FPG

FLEXIBLE PRINTED CIRCUIT (FPC)

- First for conference badge
- new material (for us) opens up new risks/ challenges
- specific stack-up to meet edge connector

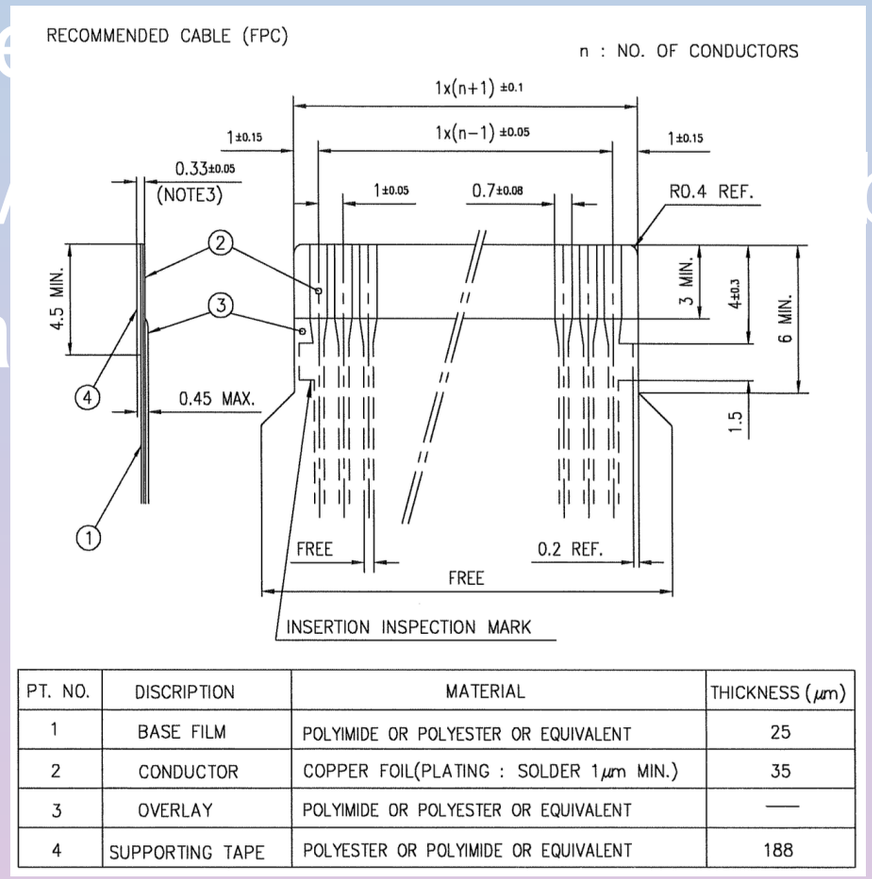
RECOMMENDED CABLE (FPC)

n : NO. OF CONDUCTORS

PT. NO.	DISCRIPTION	MATERIAL	THICKNESS (μm)
1	BASE FILM	POLYIMIDE OR POLYESTER OR EQUIVALENT	25
2	CONDUCTOR	COPPER FOIL(PLATING : SOLDER 1μm MIN.)	35
3	OVERLAY	POLYIMIDE OR POLYESTER OR EQUIVALENT	——
4	SUPPORTING TAPE	POLYESTER OR POLYIMIDE OR EQUIVALENT	188

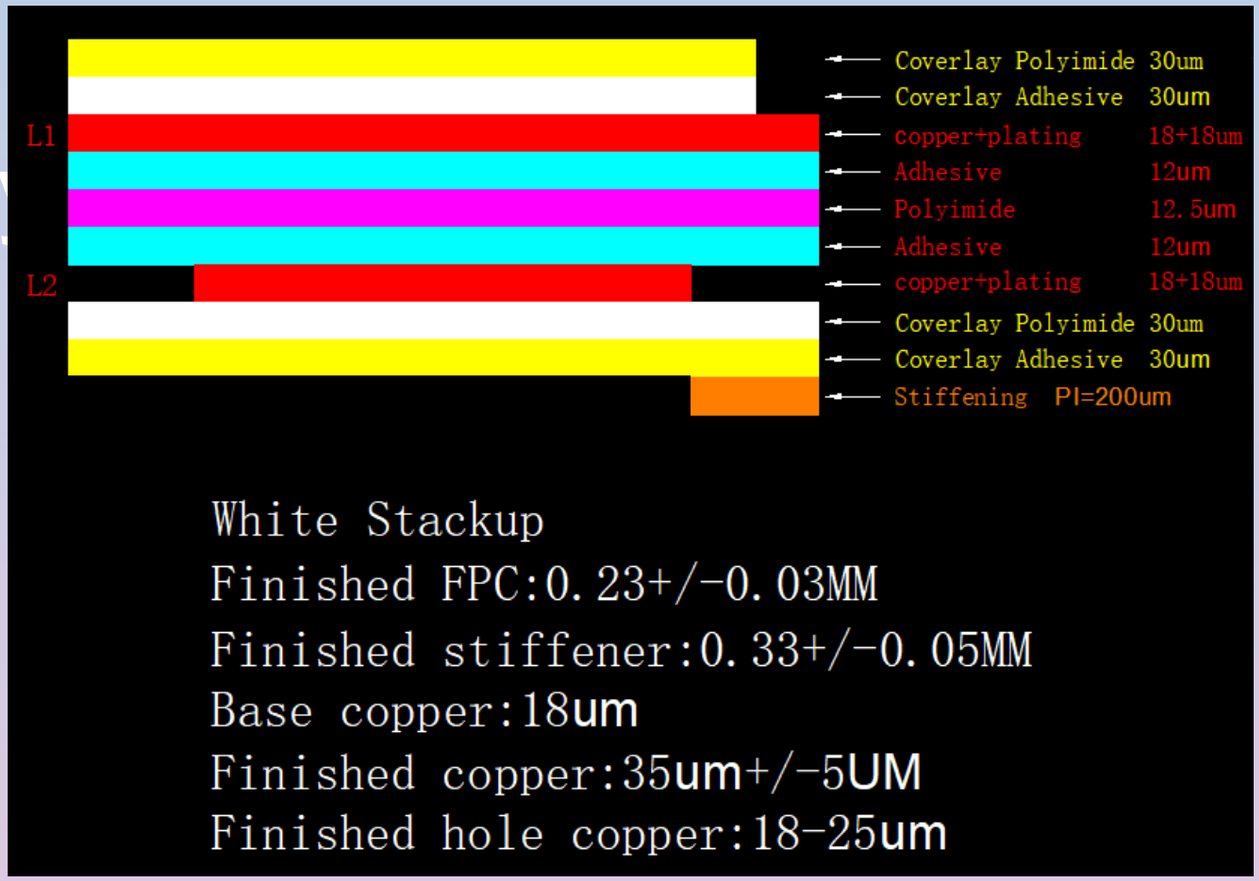

FLEXIBLE PRINTED CIRCUIT (FPC)

- edge connector as interface to the outside world
  - UART, I2C, AVR ICSP
- used with programming shield to set/read state of badge leds

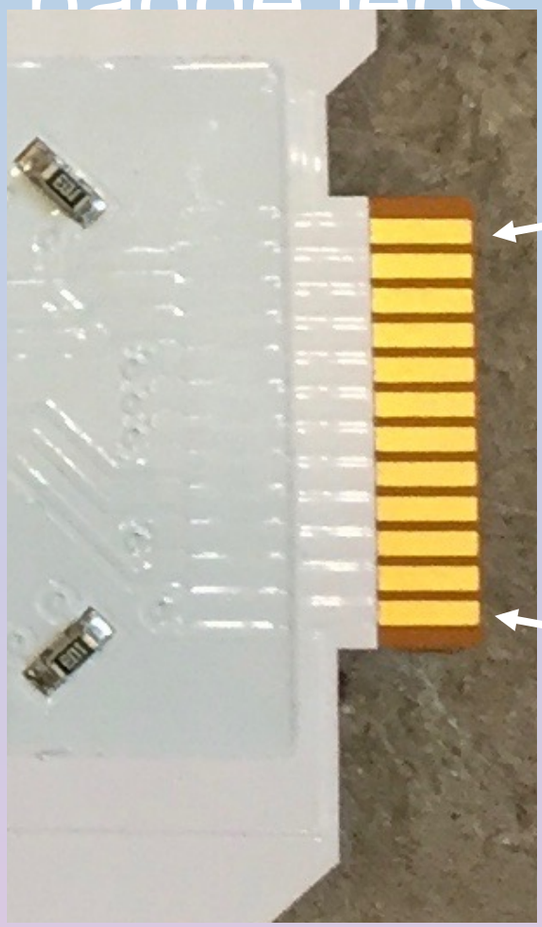

1.GND
2.SCK
3.MISO
4.MOSI
5./RST
6.SDA
7.SCL
8.SIN
9.SOUT
10./SENSE
11.GPIO
12.VCC

FLEXIBLE PRINTED CIRCUIT (FPC)

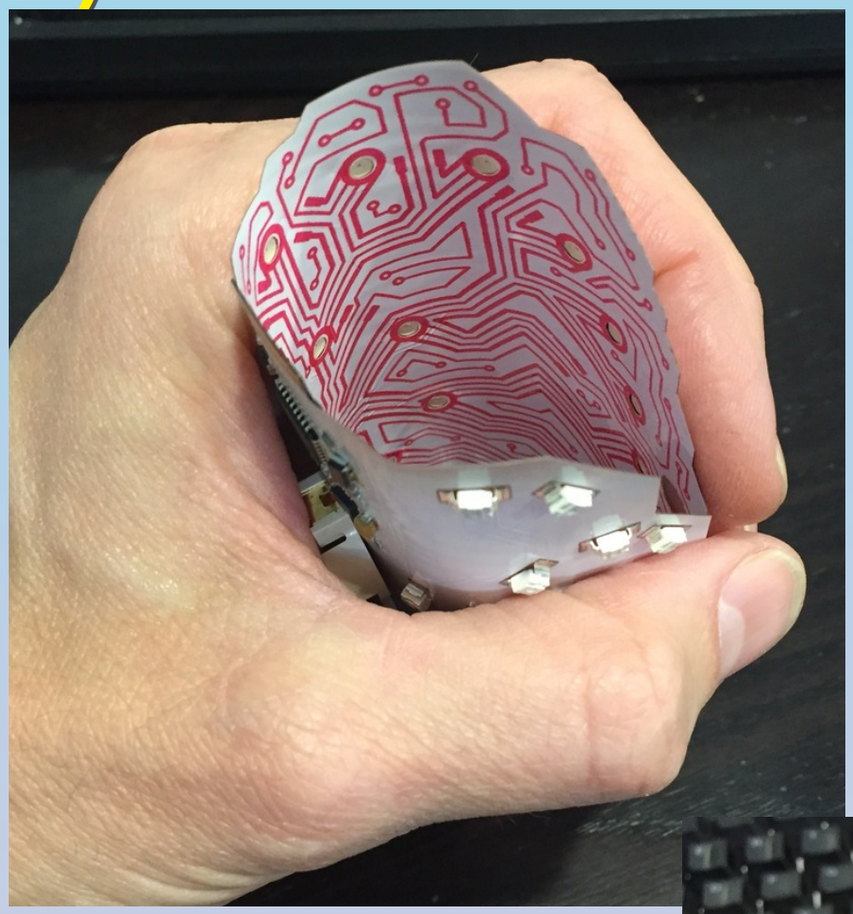





Schematic

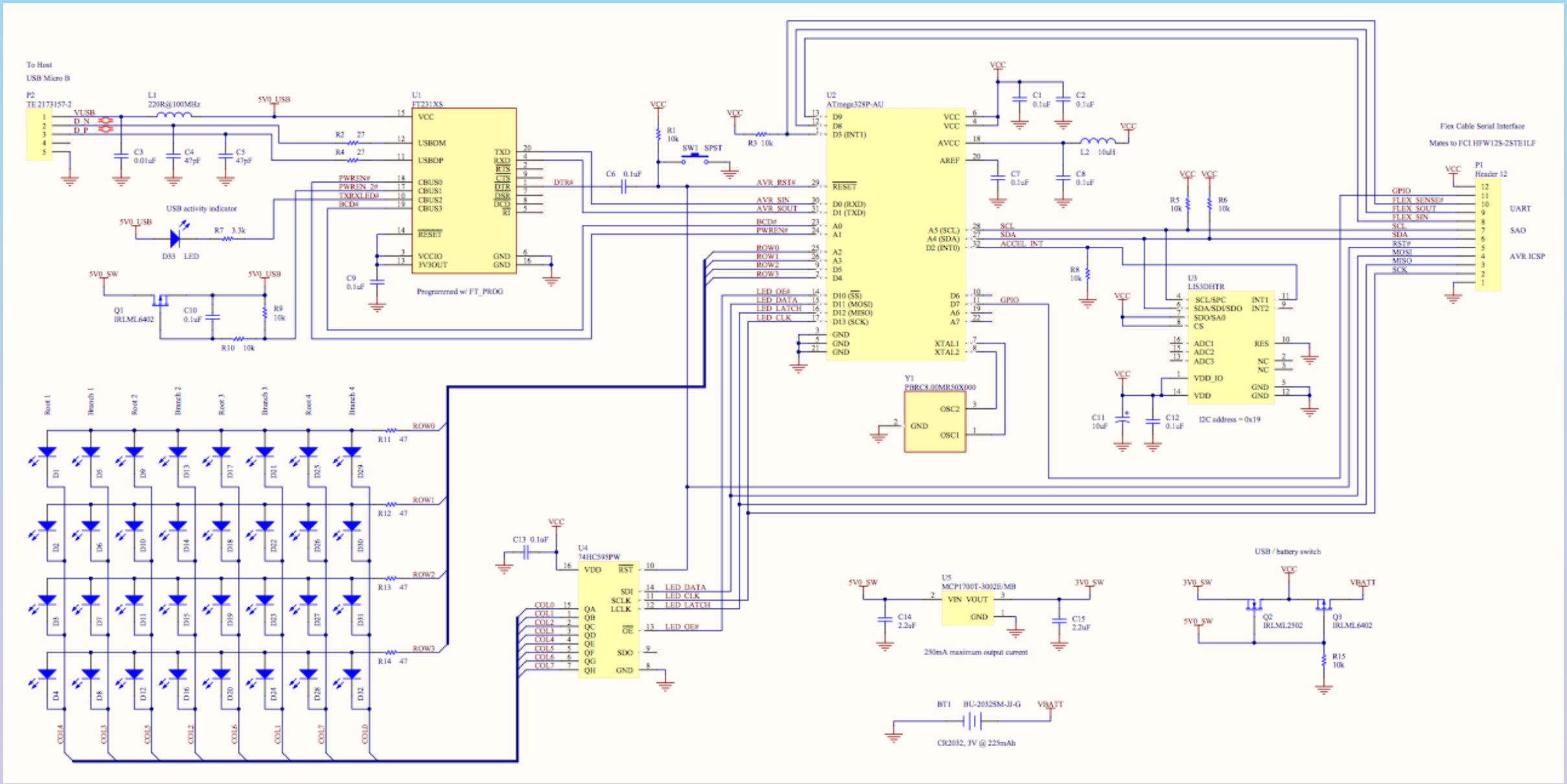
To Host
USB Micro B
P2
TE 2173157-2
L1
220R@100MHz
5V0_USB
U1
FT231XS
Programmed w/ FT_PROG
U2
ATmega328P-AU
U3
LIS3DHTR
I2C address = 0x19
Flex Cable Serial Interface
Mates to FCI HFW12S-2STE1LF
P1
Header 12
UART
SAO
AVR ICSP
USB activity indicator
D33 LED
Q1
IRLML6402
SW1 SPST
Y1
PBRC8.00MR50X000
U4
74HC595PW
U5
MCP1700T-3002E/MB
250mA maximum output current
USB / battery switch
Q2
IRLML2502
Q3
IRLML6402
BT1
BU-2032SM-JJ-G
CR2032, 3V @ 225mAh
Root 1
Branch 1
Root 2
Branch 2
Root 3
Branch 3
Root 4
Branch 4

USB INTERFACE

- allows for arduino programming and interactive mode
- FT231X USB-to-Serial UART
  - entire usb protocol handled on-chip
  - host will recognize as virtual serial device/com port

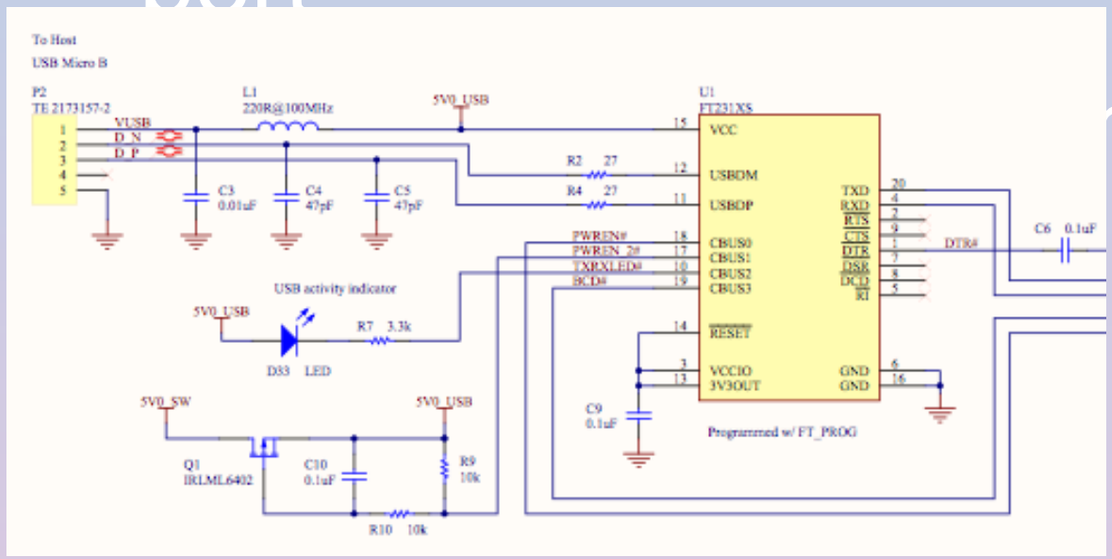

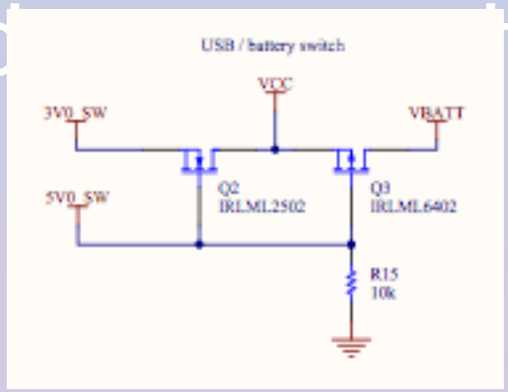

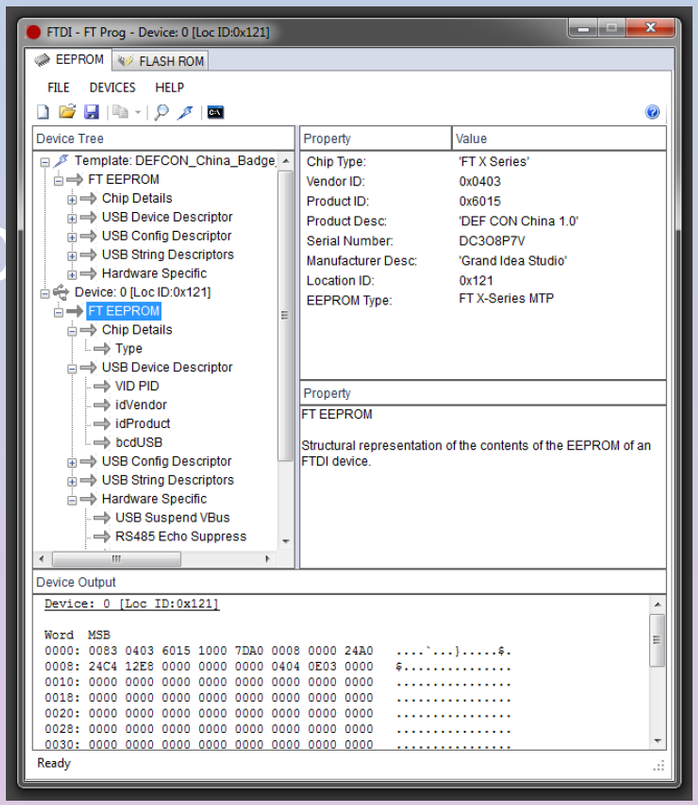

led matrix

- multiplexing via led matrix library
  - row controlled by discrete i/O
  - column controlled through 74hc595 shift register
  - refresh @ 175hz to reduce flicker
- each led individually addressable, dimmable (16 le

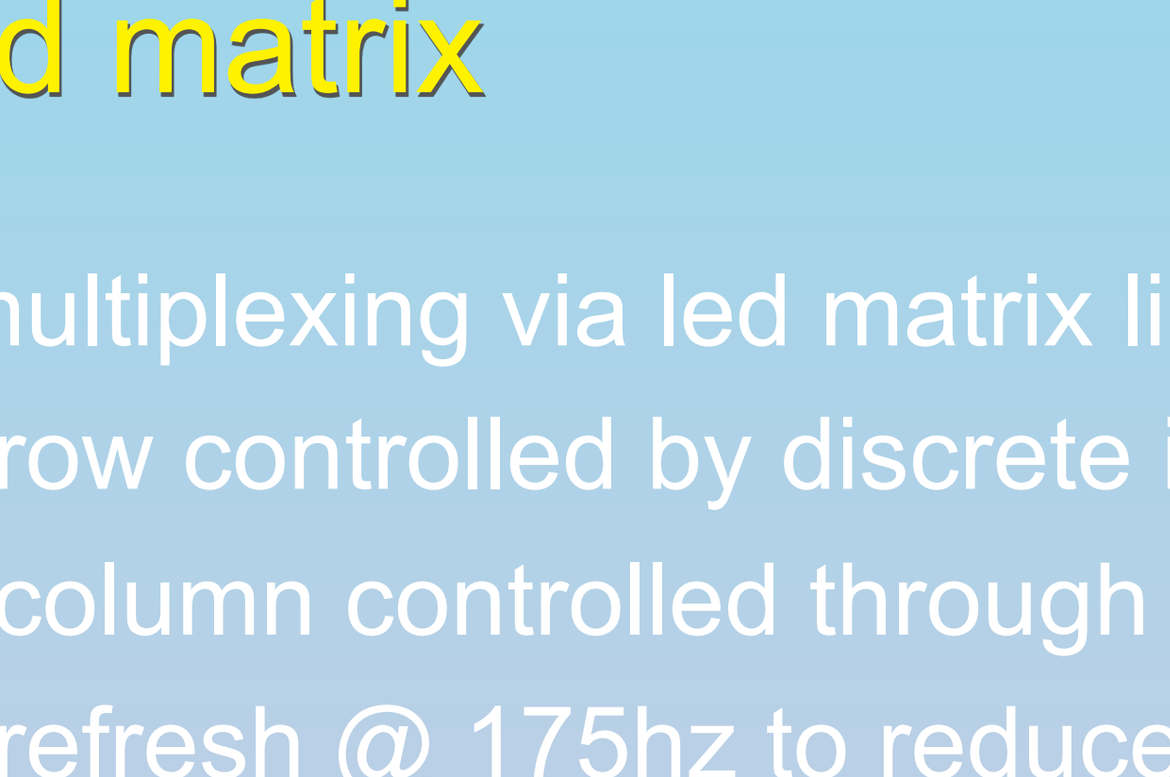

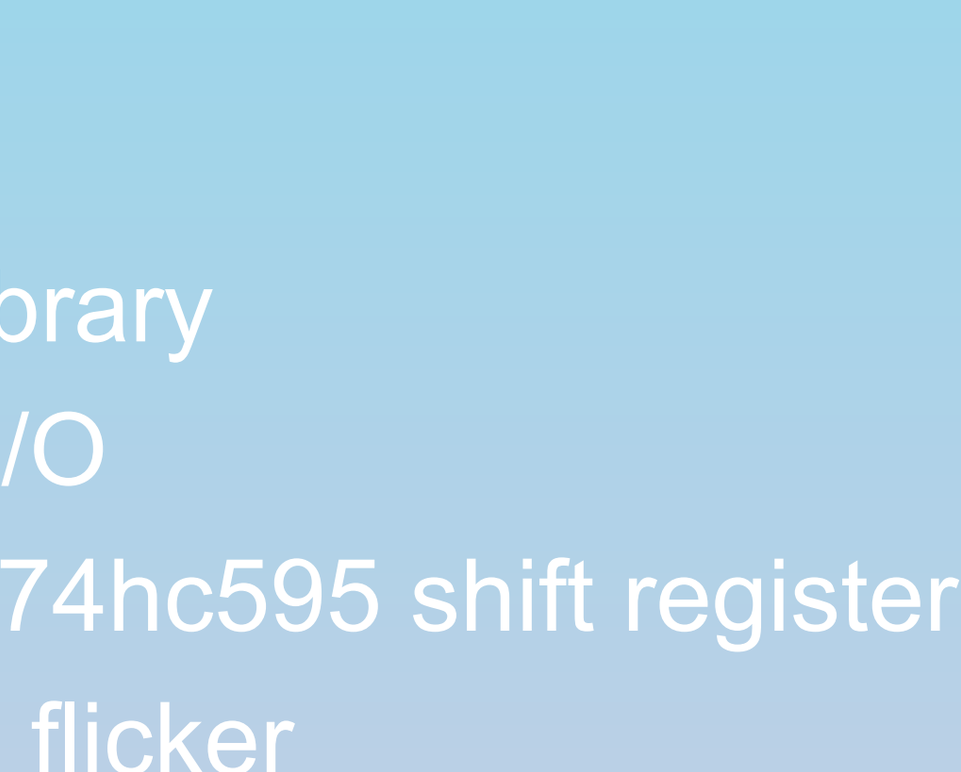

accelerometer

- ST microelectronics LIS3DH
  - 3-axis digital output (i2c/SPI)
  - +/- 2, 4, 8, 16g range
  - interrupt on motion or free fall
- used to preserve battery life
  - sleep mode @ 10 seconds of inactivity
- Raw values available through interactive mode

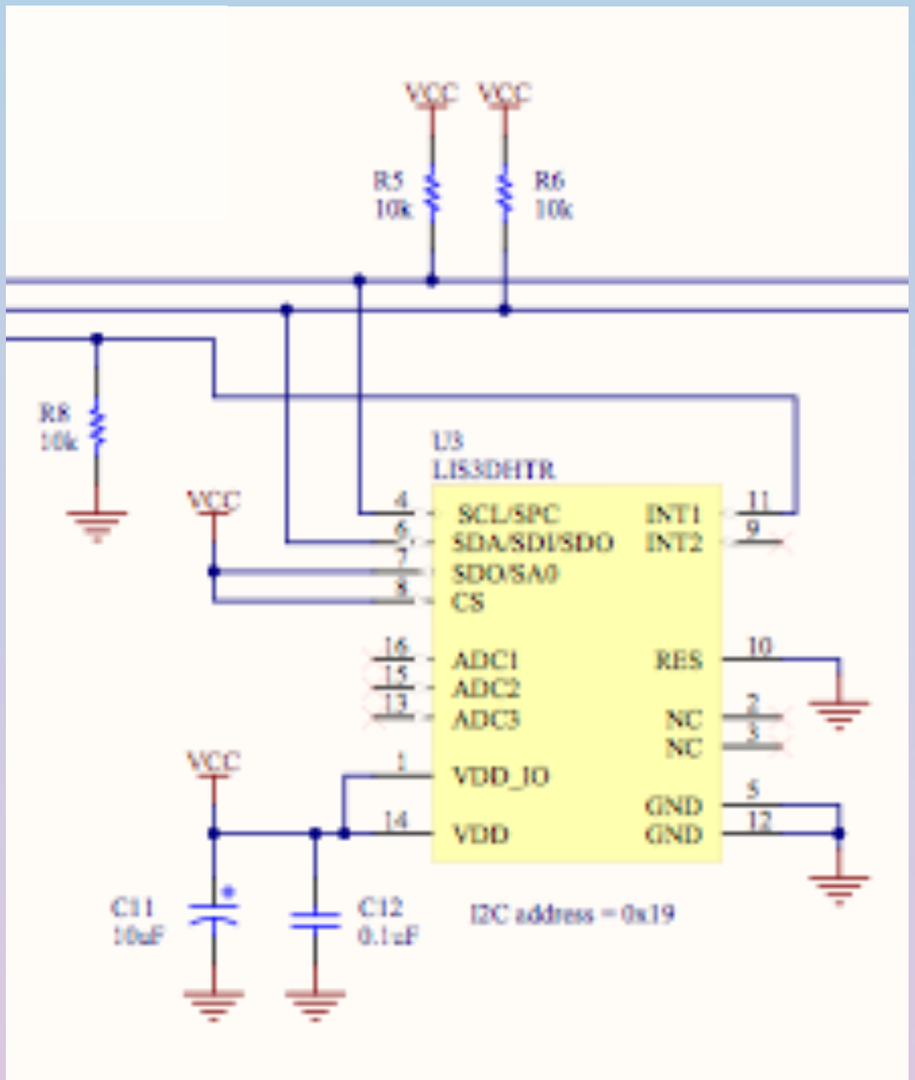

bill-of-materials

Item	Quantity	Reference	Manufacturer	Manuf. Part #	Distributor	Distrib. Part #	Description
1	1	BT1	MPD	BU2032SM-JJ-GTR	N/A	N/A	Battery Holder, CR2032, SMD
1b	1	N/A	Panasonic	CR2032	Digi-Key	P189-ND	Battery, Coin Cell, Lithium, 3V, 225mAh
2	9	C1, C2, C6, C7, C8, C9, C10, C12, C13	Kemet	C0603C104K4RACTU	Digi-Key	399-1096-2-ND	Capacitor, 0.1uF, 16V, Ceramic, 10%, X7R, 0603
3	1	C3	Samsung	CL10B103KB8NCNC	Digi-Key	1276-1921-2-ND	Capacitor, 0.01uF, 50V, Ceramic, 10%, X7R, 0603
4	2	C4, C5	AVX	06035A470JAT2A	Digi-Key	478-1171-2-ND	Capacitor, 47pF, 50V, Ceramic, 5%, C0G/NP0, 0603
5	1	C11	Kemet	T491A106M016AT	Digi-Key	399-3687-2-ND	Capacitor, 10uF, 16V, Tantalum, 20%, Size A
6	2	C14, C15	Taiyo Yuden	TMK212B7225KG-TR	Digi-Key	587-2991-2-ND	Capacitor, 2.2uF, 25V, Ceramic, 10%, X7R, 0805
7	4	D1, D9, D17, D25	Kingbright	AA3528SYCKT09	N/A	N/A	LED, Yellow, 250mod, 2.0Vf, 590nm, Reverse Mount, PLCC-2
8	4	D2, D10, D18, D26	Kingbright	AA3528SECKT09	N/A	N/A	LED, Orange, 350mod, 2.1Vf, 605nm, Reverse Mount, PLCC-2
9	8	D3, D4, D11, D12, D19, D20, D27, D28	Kingbright	AA3528SURCKT09	N/A	N/A	LED, Red, 350mcd, 1.95Vf, 630nm, Reverse Mount, PLCC-2
10	16	D5, D6, D7, D8, D13, D14, D15, D16, D21, D22, D23, D24, D29, D30, D31, D32	Kingbright	AA3528CGCKT09	N/A	N/A	LED, Green, 100mod, 2.1Vf, 570nm, Reverse Mount, PLCC-2
11	1	D33	Kingbright	APT1608LQWF/D	N/A	N/A	LED, White, 35mod, 2.65Vf, 0603
12	1	L1	TDK	MPZ2012S221AT000	Digi-Key	445-1568-2-ND	Inductor, Ferrite Bead, 220R @ 100MHz, 3A, 0805
13	1	L2	Taiyo Yuden	LBMF1608T100K	Digi-Key	587-1714-2-ND	Inductor, Wirewound, 10uH, 10%, 360mR, 80mA, 0603
14	1	P2	TE Connectivity	2173157-2	Verical	N/A	Connector, Micro-USB Type B, R/A, 5 position, SMD
15	2	Q1, Q3	Infineon	IRLML6402TRPBF	Digi-Key	IRLML6402PBFTR-ND	Transistor, MOSFET, P-Channel, 20V, 65mR @ 3.7A, SOT23
16	1	Q2	Infineon	IRLML2502TRPBF	Digi-Key	IRLML2502TRPBFTR-ND	Transistor, MOSFET, N-Channel, 20V, 45mR @ 4.2A, SOT23
17	8	R1, R3, R5, R6, R8, R9, R10, R15	Panasonic	ERJ-3GEYJ103V	Digi-Key	P10KGTR-ND	Resistor, 10k, 5%, 1/10W, 0603
18	2	R2, R4	Panasonic	ERJ-3GEYJ270V	Digi-Key	P27GTR-ND	Resistor, 27 ohm, 5%, 1/10W, 0603
19	1	R7	Panasonic	ERJ-3GEYJ332V	Digi-Key	P3.3KGTR-ND	Resistor, 3.3k, 5%, 1/10W, 0603
20	4	R11, R12, R13, R14	Panasonic	ERJ-3GEYJ470V	Digi-Key	P47GTR-ND	Resistor, 47 ohm, 5%, 1/10W, 0603
21	1	SW1	Panasonic	EVP-AA202K	Digi-Key	P13348SDKR-ND	Switch, SPST, Tactile Momentary, 160gf, 3.5 x 2.9mm, J-Lead
22	1	U1	FTDI	FT231XS-R	Digi-Key	768-1129-2-ND	IC, USB-to-UART Bridge, SSOP20
23	1	U2	Microchip	ATMEGA328P-AU	N/A	N/A	IC, Microcontroller, 32KB Flash, TQFP32
23b	1	N/A	Microchip	N/A	N/A	N/A	IC, Microcontroller, Programming
24	1	U3	STMicroelectronics	LIS3DHTR	Digi-Key	497-10613-6-ND	IC, Accelerometer, 3-Axis, 2-16g, LGA16
25	1	U4	Nexperia	74HC595PW,118	Digi-Key	1727-3068-2-ND	IC, Shift Register, 8-bit, TSSOP16
26	1	U5	Microchip	MCP1700T-3002E/MB	Digi-Key	MCP1700T-3002E/MBCT-ND	Voltage Regulator, LDO, 3.0V, 250mA, SOT89-3
27	1	Y1	Kyocera	PBRC8.00MR50X000	Mouser	581-PBRC8.00MR50X	Resonator, 8MHz, 0.5%, Internal 15pF Capacitor, SMD
28	1	PCB	Electronic Interconnect	DCN1.0	N/A	N/A	PCB Fabrication, Assembly, Test

Firmware

- ARDUINO
  - open source platform based on easy-to-use hw/sw/FW
  - Third-party libraries to add functionality
- 90% of FLash (27.6kB), 43% of RAM (887 bytes)
- loop
  - set power state (battery, usb, usb charger)
  - check for/process interactive mode
  - check for/process fpc communication
  - update leds

LIBRARIES

- Third-party libraries to add functionality to arduino
  - essential for rapid development
  - some code modifications required during badge integration
- Low power
  - https://github.com/rocketscream/Low-Power
- Adafruit_LIS3DH (ACCELEROMETER)
  - https://github.com/adafruit/Adafruit_LIS3DH
- Adafruit_SENSOR (sensor abstraction layer)
  - https://github.com/adafruit/Adafruit_Sensor

LIBRARIES

- led matrix (individually addressable, dimmable, shift register)
  - https://github.com/marcmerlin/LED-Matrix
- ADAFRUIT-GFX-LIBRARY (Core graphics primitives)
  - https://github.com/adafruit/Adafruit-GFX-Library
- DIO2 (Fast digital i/O)
  - www.codeproject.com/Articles/732646/Fast-digital-I-O-for-Arduino
- Timerone (ENHANCED TIMer, PERIODIC INTERRUPTS)
  - https://github.com/PaulStoffregen/TimerOne

FABRICATIO
N

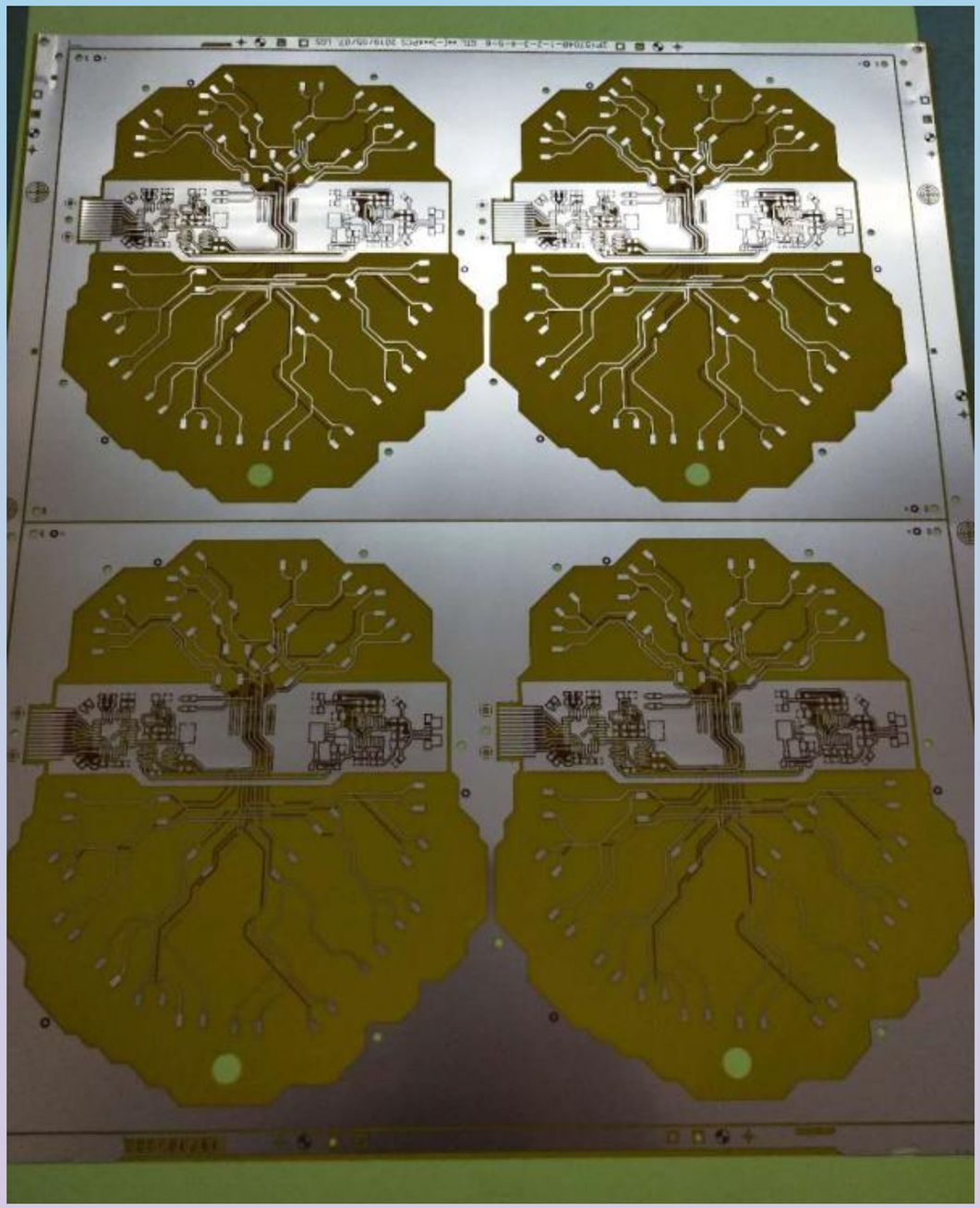



FABRICATIO N



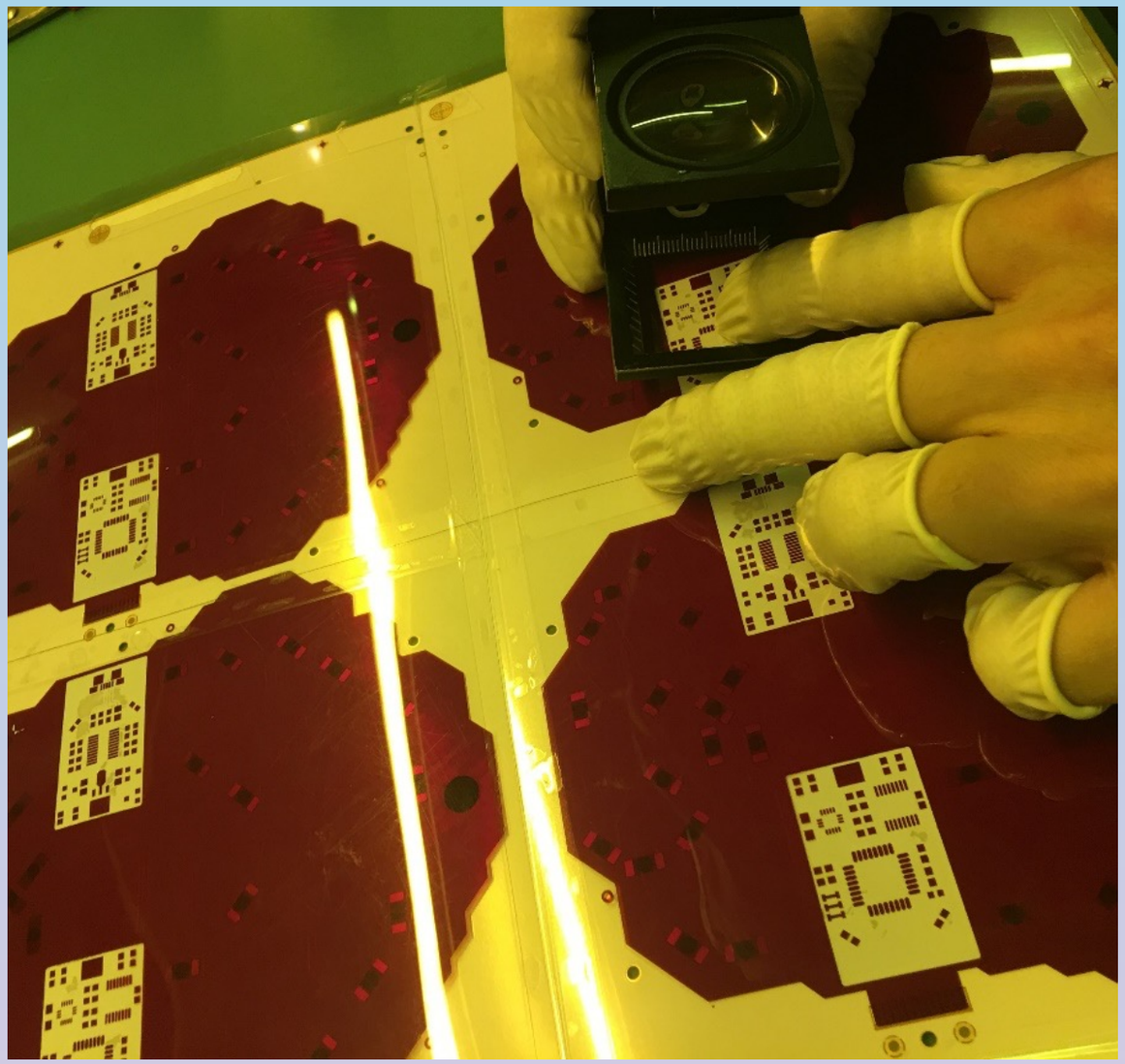

FABRICATION



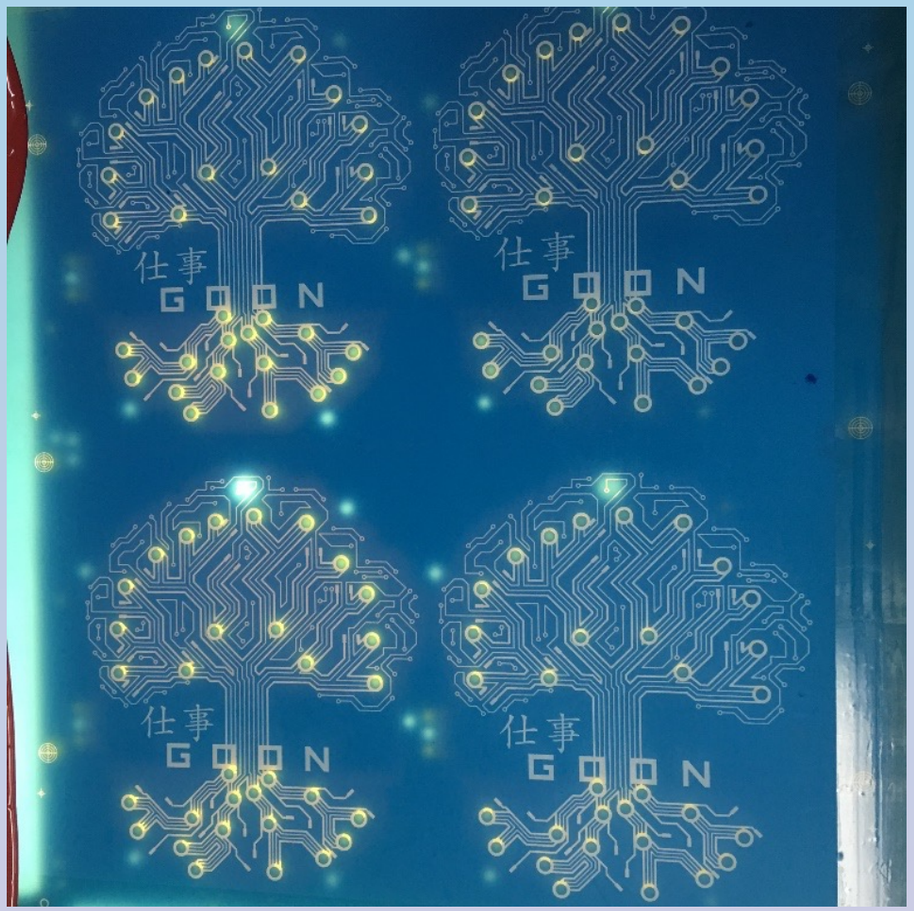



ASSEMBLY

programming / testing

- raspberry pi 3 model b+
  - shell script to program ft231X and ATmega328P via usb
- power on self test
- visual inspection of leds
- detection of acceleron

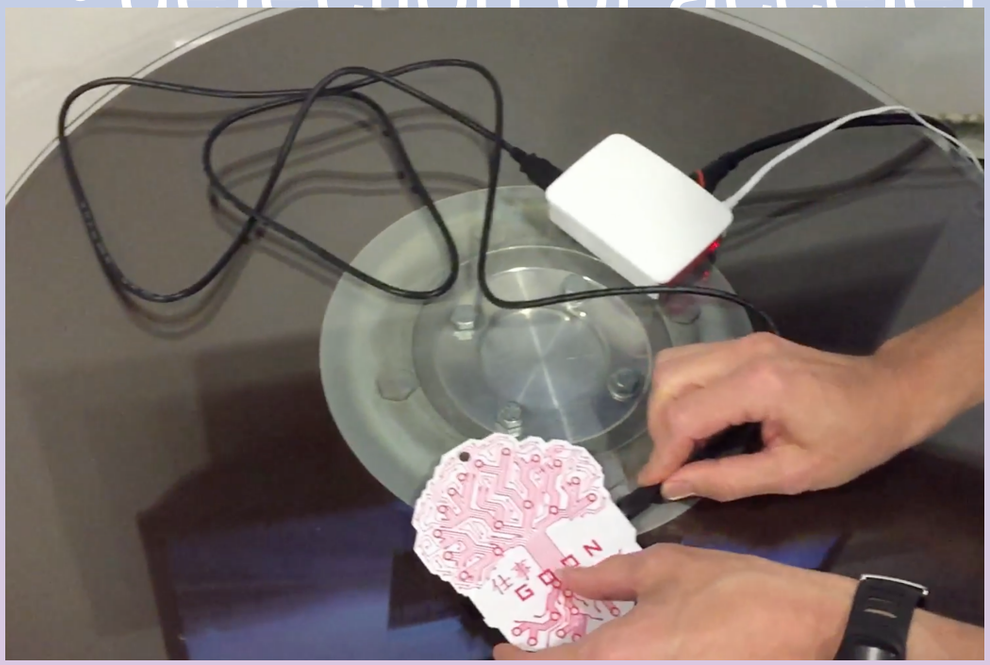

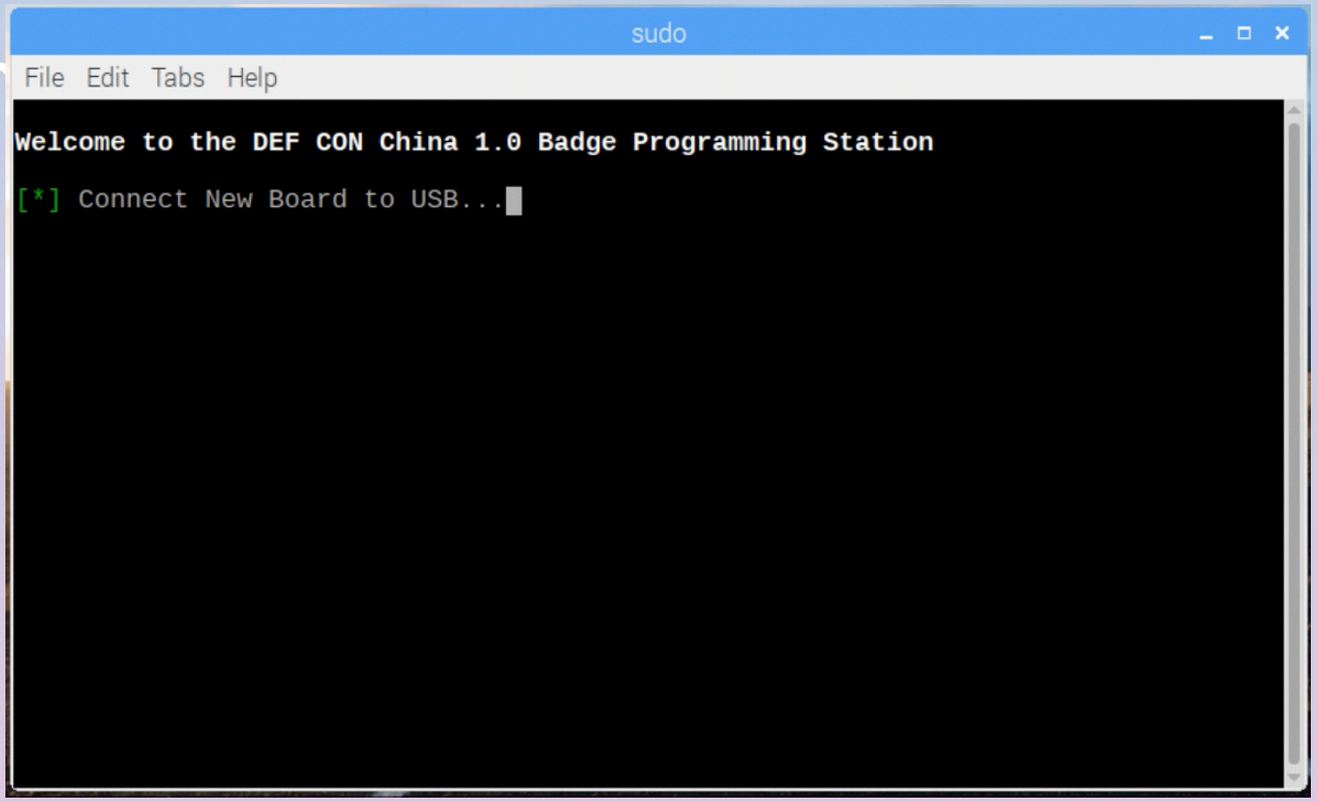

numbers

- Human (Attendee), black silkscreen: 2,784
- Goon, red: 156
- Speaker, blue: 50
- Village, blue: 90
- Sponsor, grey: 120
- Press, green: 100

- TOTAL: 3,300



(not production versions)

CHALLENGES

- mechanical weaknesses
- reworking flex pcb
- time frame

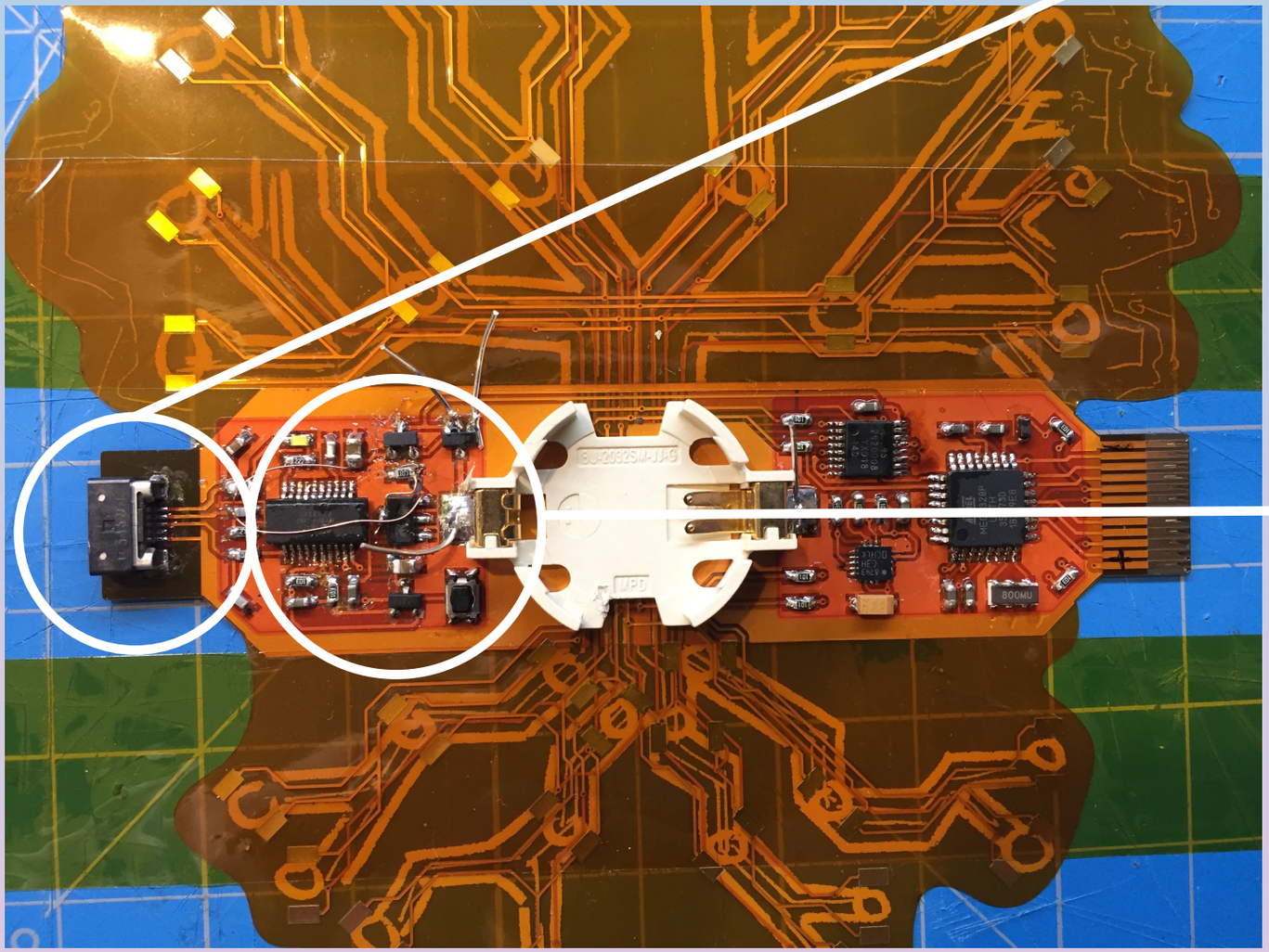

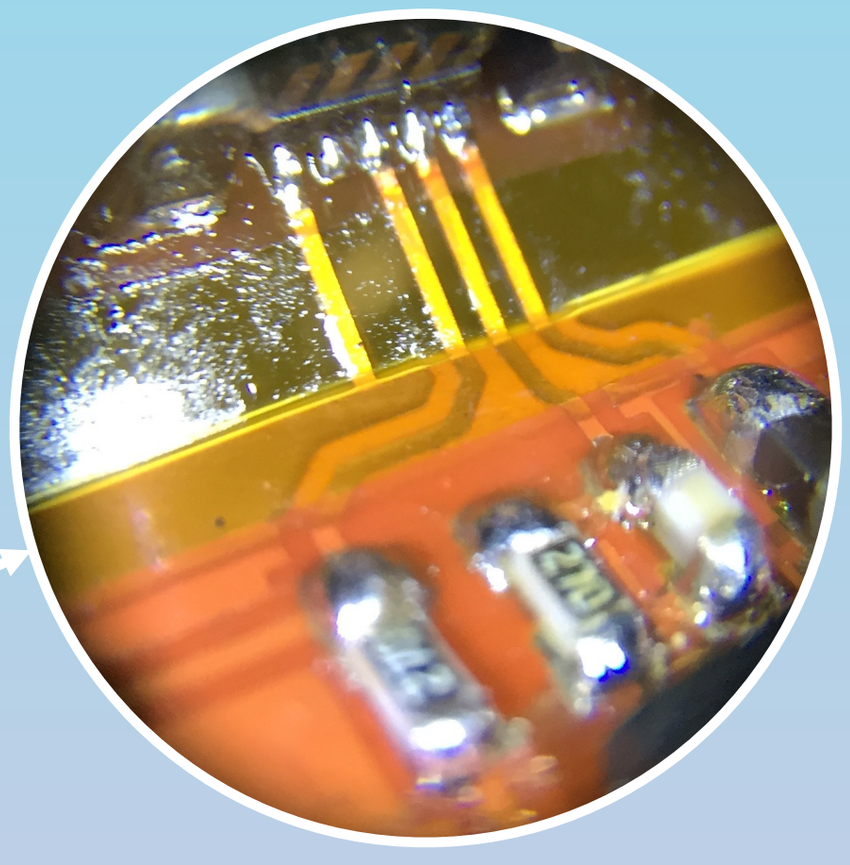

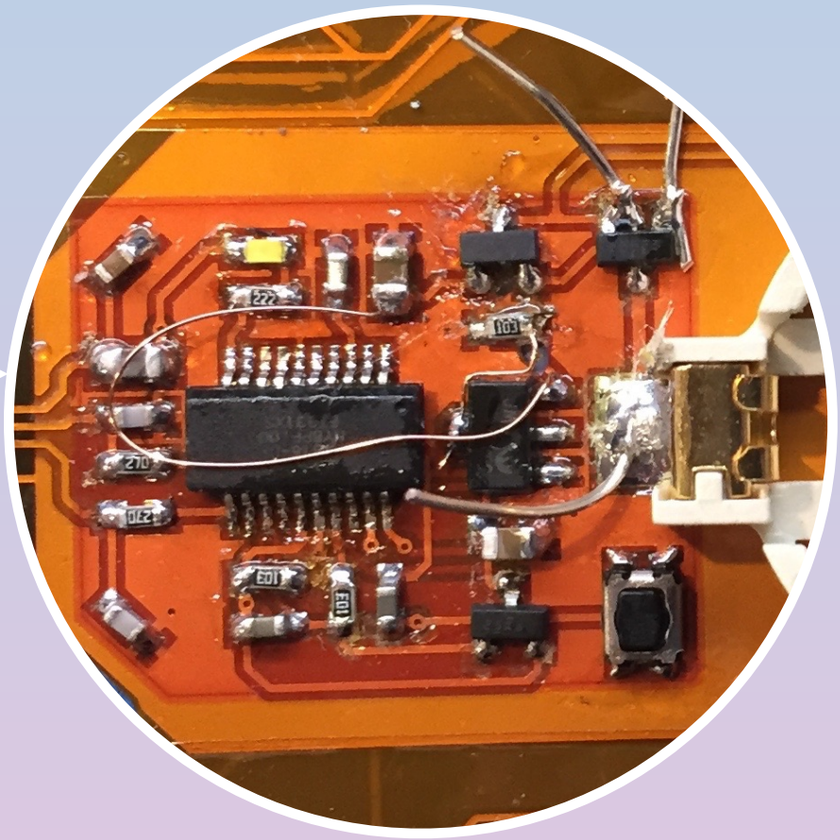

battery life

- cr2032 3V lithium coin cell
  - 225mah to 2V
- Power up, idle: 3.3mA
- all LEDs enabled: 10mA
- sleep mode: 4-6uA
- accelerometer to detect motion
  - sleep mode @ 10 seconds of inactivity

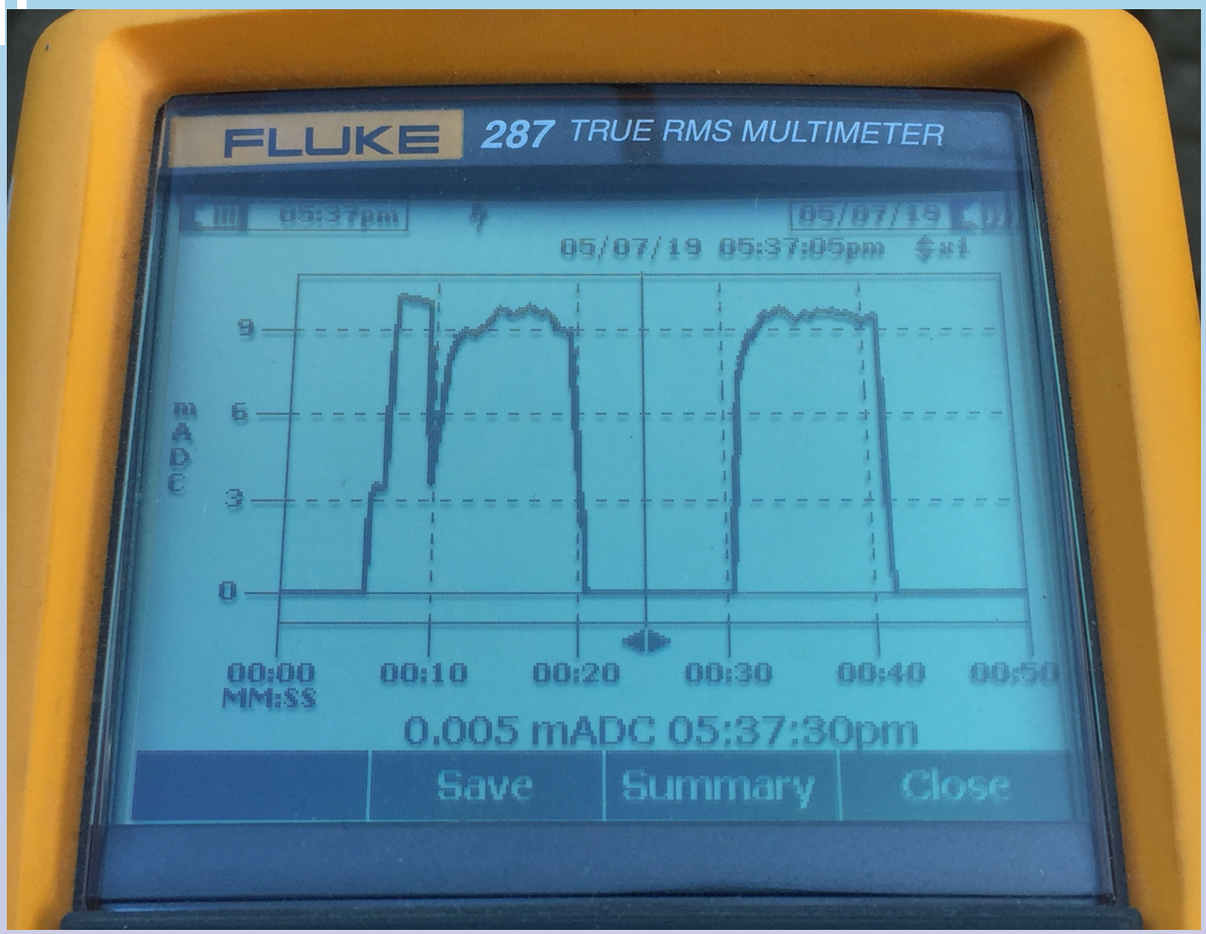

ACCESSORIES

- BREAKOUT BOARD
  - access all fpc signals
    - UART, I2C, AVR ICSP
  - sao adapter



- available in hhv and badge hacking workshop
- http://oshpark.com/shared_projects/X4QDh3nj

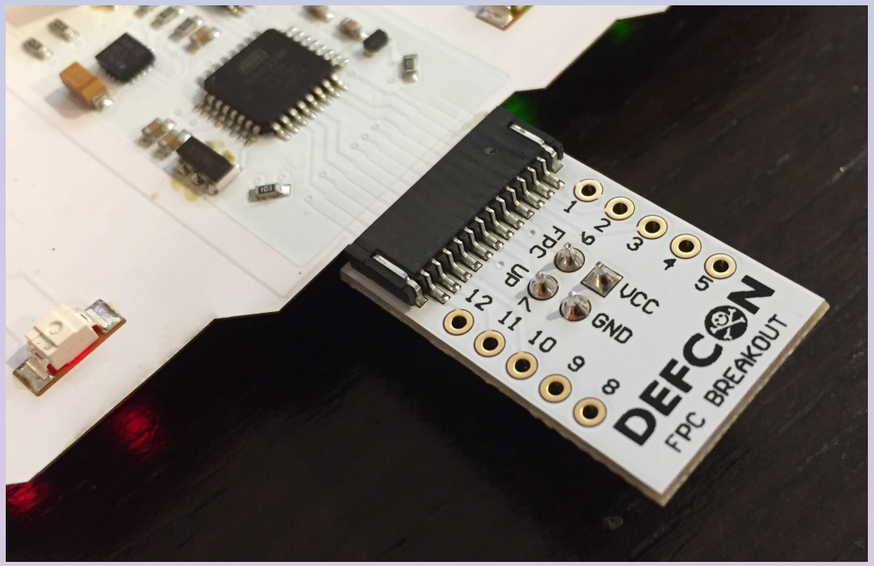

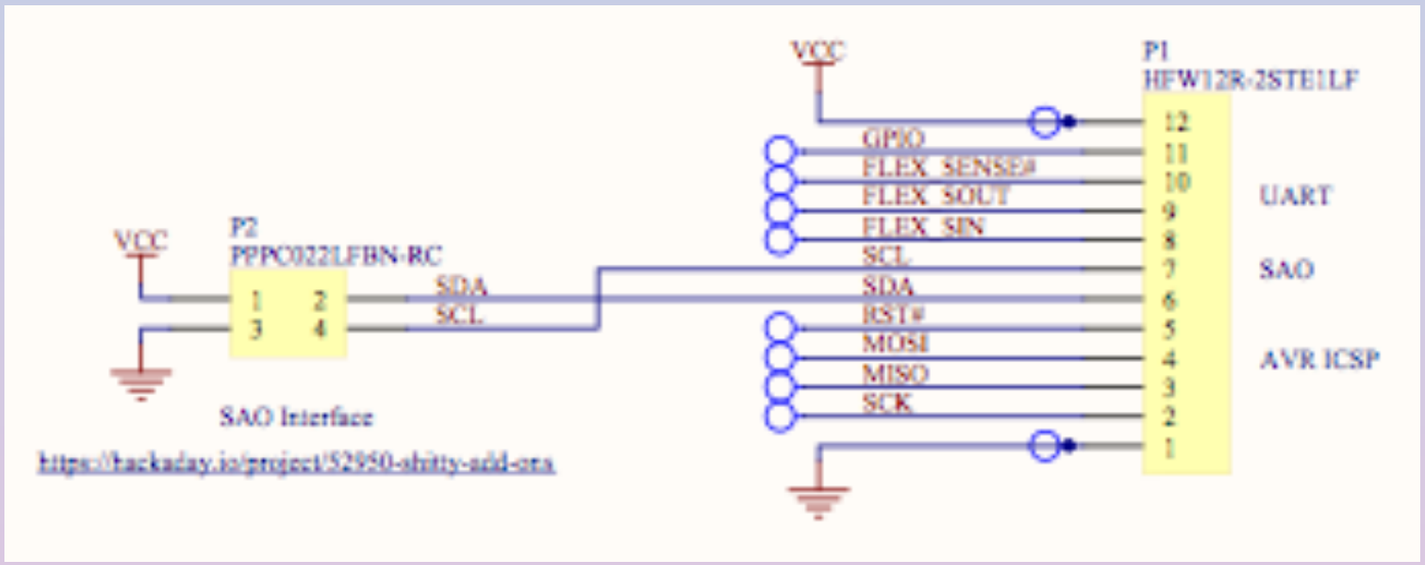

ACCESSORIES

- PROGRAMMING SHIELD
  - serial communication via fpc
  - set/clear individual led
  - read state of badge
- arduino w/ custom shield
  - txs0104 level translator
  - dip switches
  - i2c, avr icsp footprints
- http://oshpark.com/shared_projects/WGHZCahO

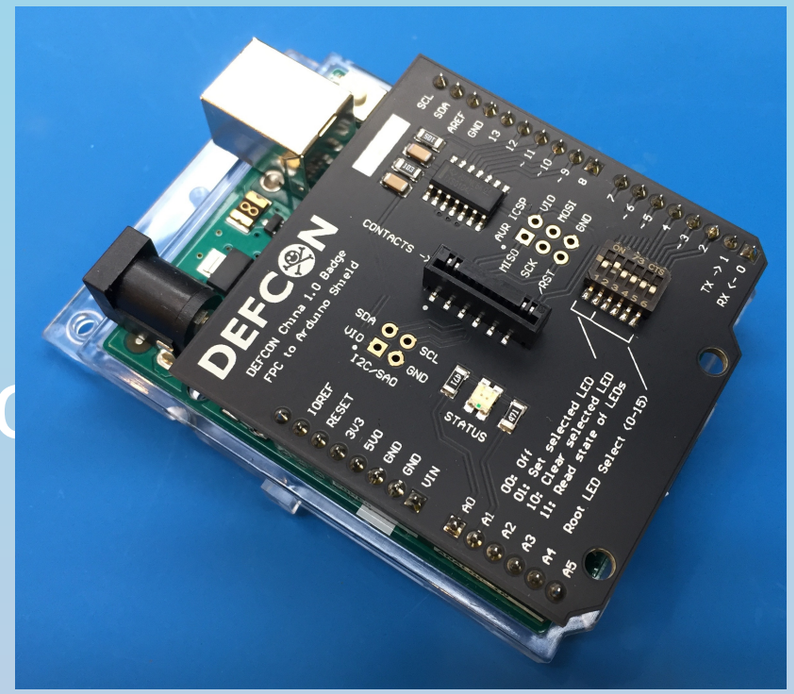

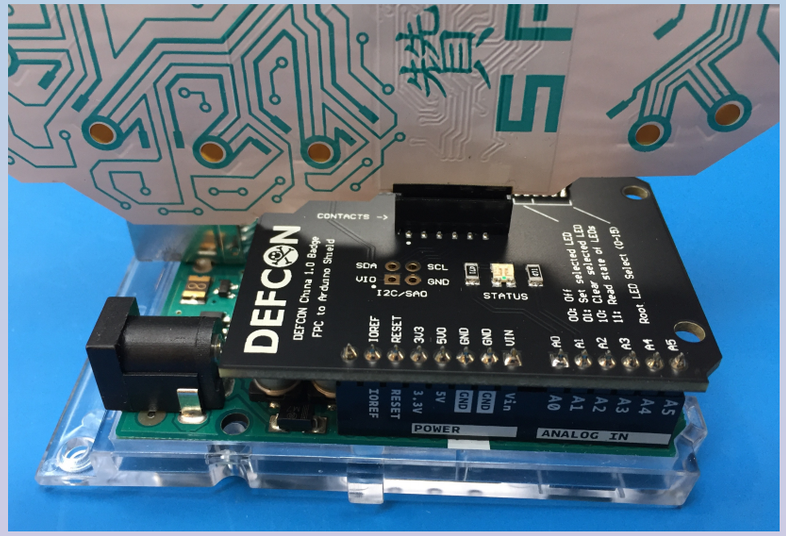

demonstration

THE TREE OF PROMISE

- INSTALLATION BY Deqing SUN & PEIQI SU (new york interactive)
- EXTENDs THE BADGE FUNCTIONALITY INTO INTERACTIVE ART
- semi- 6 meter
- BADG
(OPE

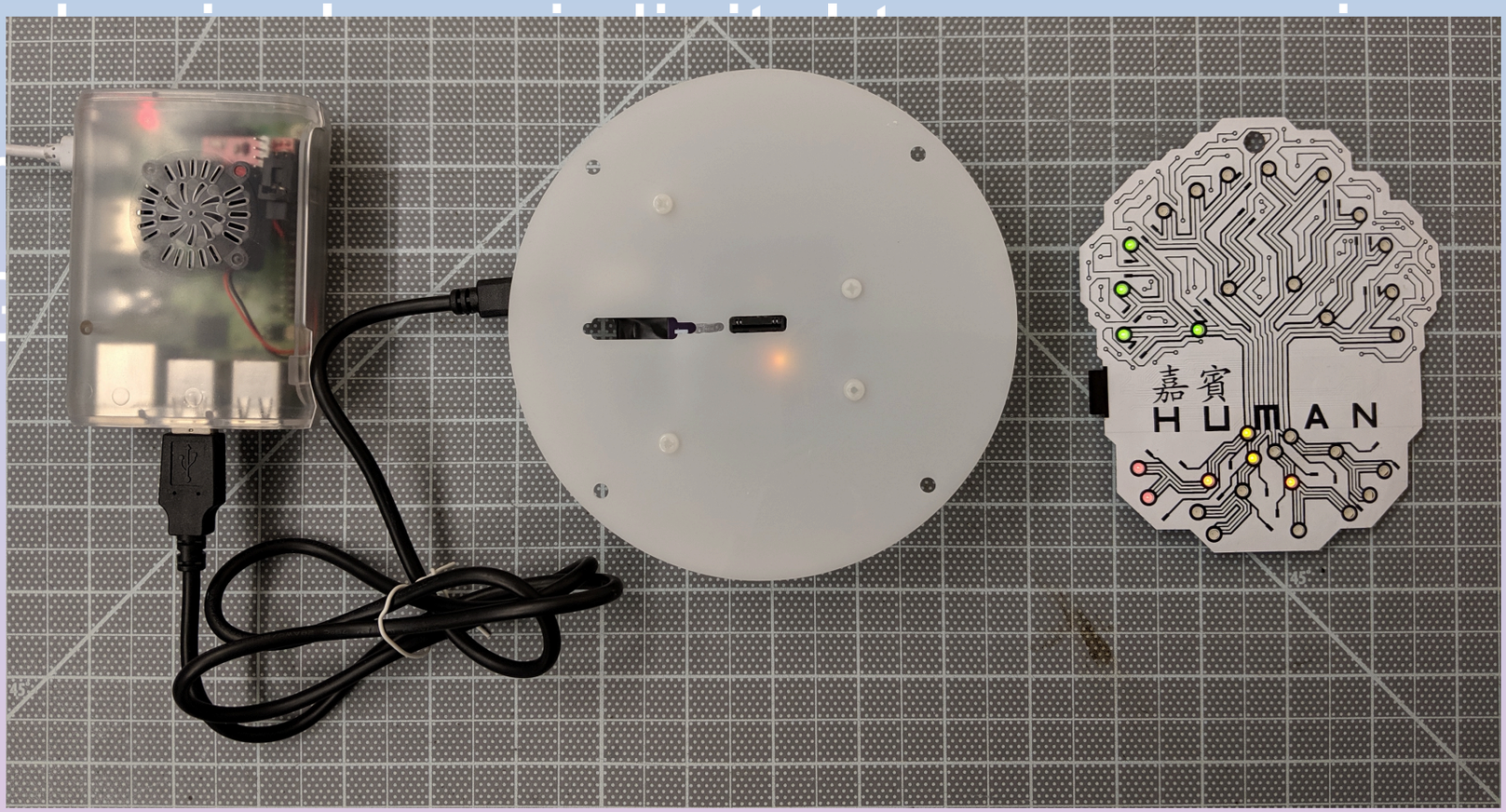

THE TREE OF PROMISE

- LED tree fruit
  - graphics displayed on a 3d cube
  - TOUCH SENSITIVE
- TREE BRANCHES
- ALGORITHM TO GENERATE UNIQUE BRANCH FOR EACH ATTENDEE

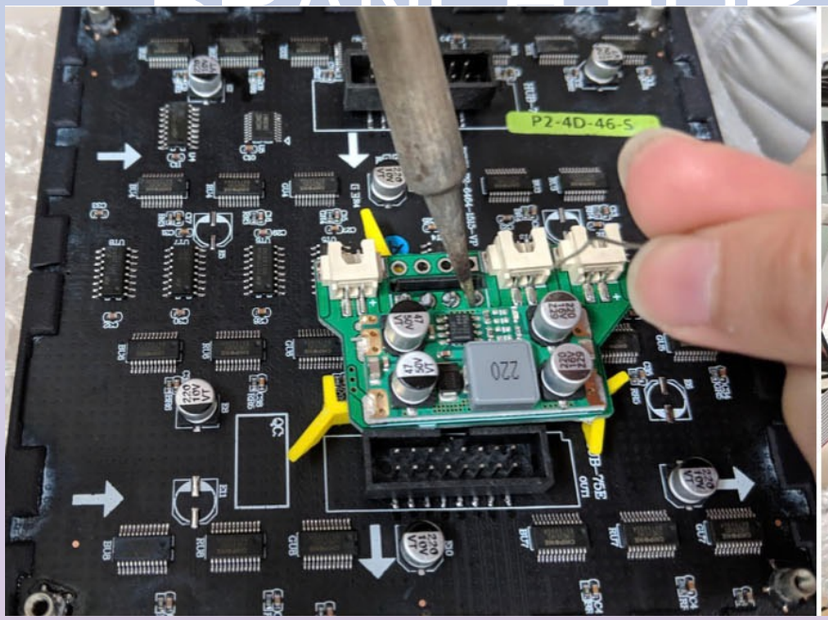





resources

- design documentation, code, etc.
  - www.grandideastudio.com/portfolio/defcon-china-2019-badge

QUESTIONS?



enjoy the conference!

@JOEGRAND |
www.grandideastudio.com