DEFCON CHINA 1.0 BADGE hacking workshop



joe Grand aka kingpin

workshop goals

- informal environment
- a deeper look into the badge
- setup development environment
- modify/recompile CODE
- open lab

gameplay

- complete tasks, get rewarded
- 4 roots and 4 branches, each with 4 leds
- when task is complete, badge inserted into programmer to unlock LED
- when each root is complete, magic happens
- when all roots are complete, even magic happens

Hardware

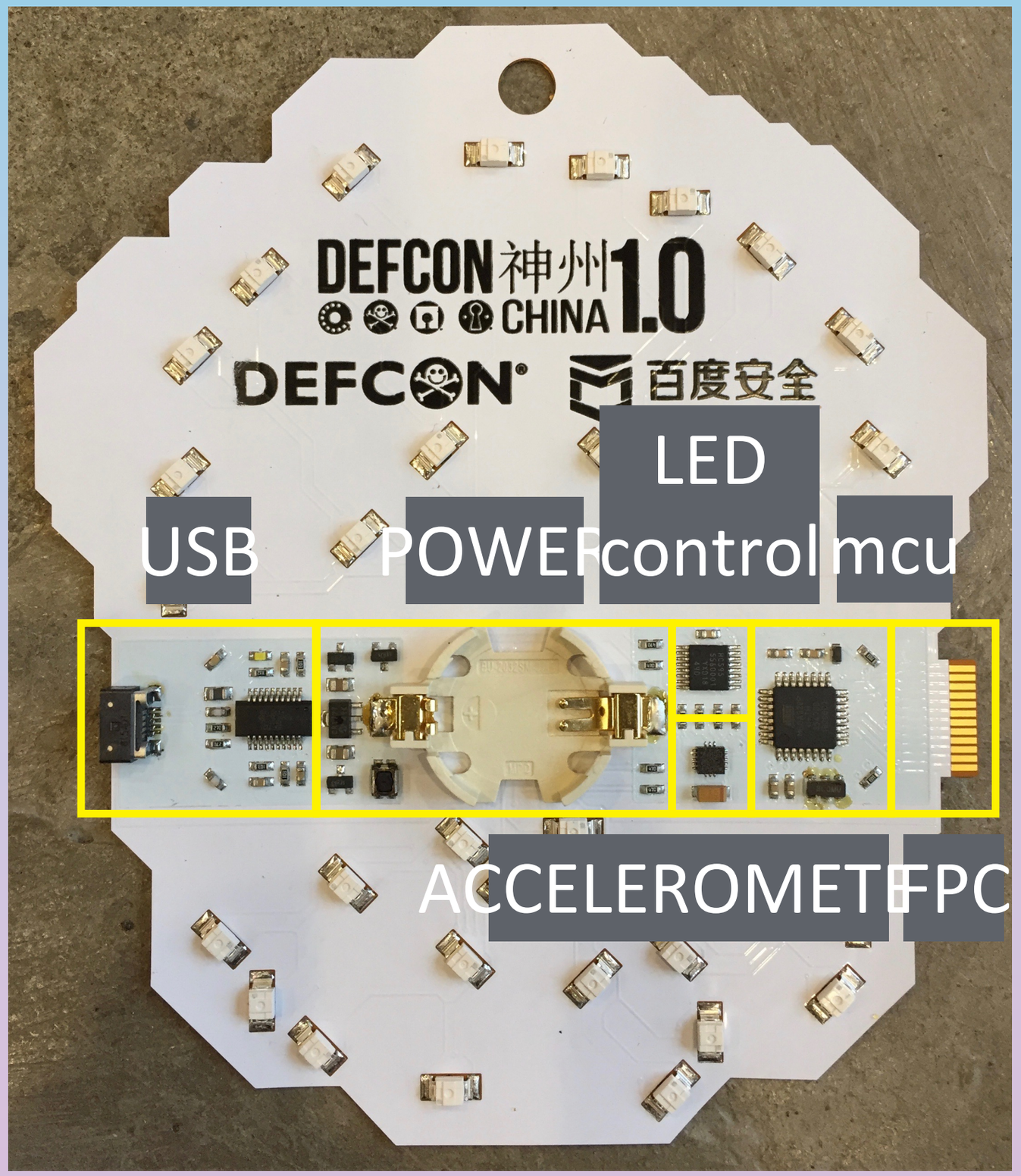
DEFCON 神州 1.0
CHINA
DEFCON
百度安全
LED
USB
POWER
control
mcu
ACCELEROMETER
FPC

block diagram

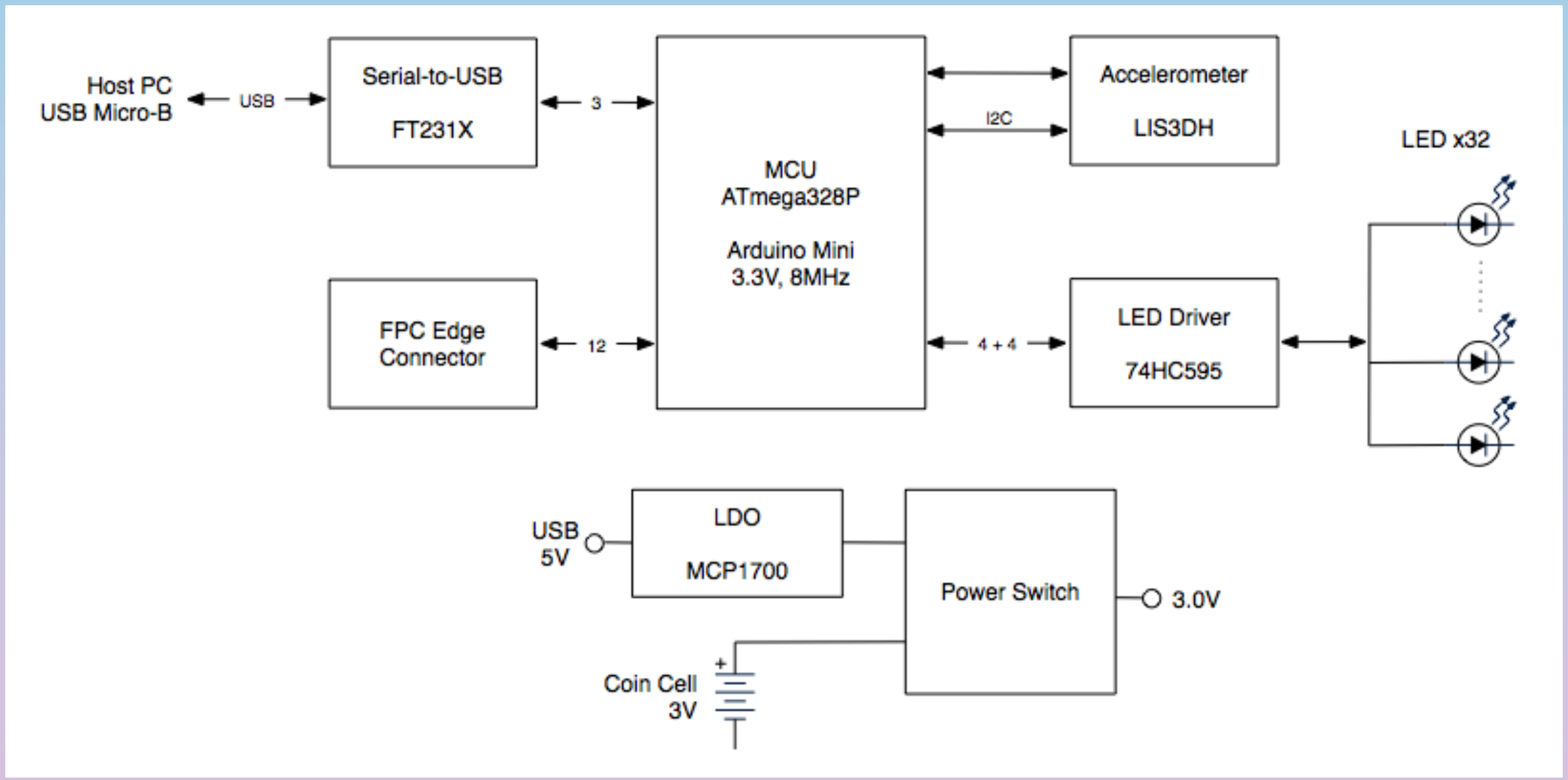

Schematic

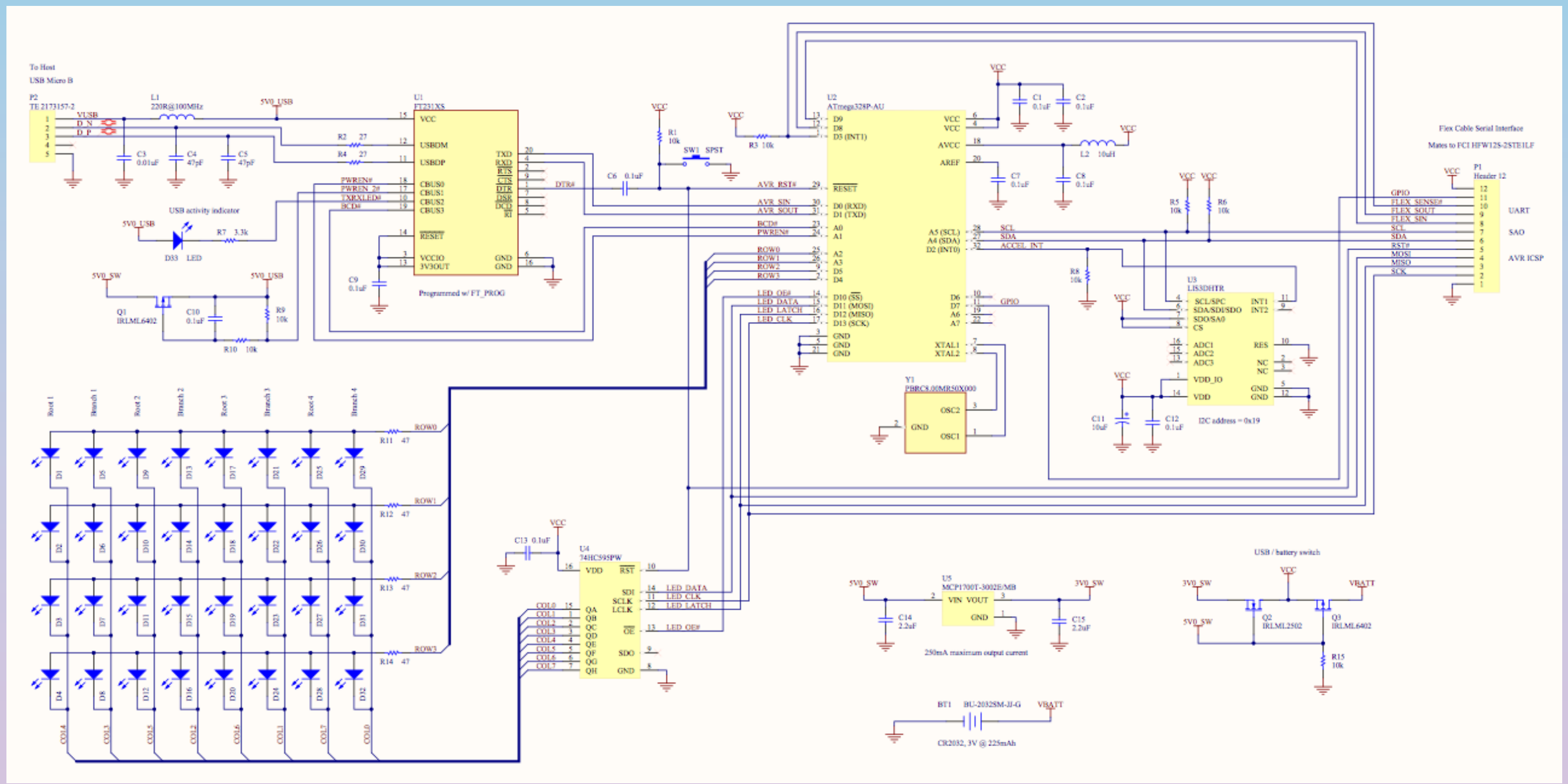
To Host
USB Micro B
P2
TE 2173157-2
L1
220R@100MHz
5V0_USB
U1
FT231XS
Programmed w/ FT_PROG
U2
ATmega328P-AU
U3
LIS3DHTR
I2C address = 0x19
Flex Cable Serial Interface
Mates to FCI HFW12S-2STE1LF
P1
Header 12
UART
SAO
AVR ICSP
USB activity indicator
D33 LED
Q1
IRLML6402
Y1
PBRC8.00MR50X000
U4
74HC595PW
U5
MCP1700T-3002E/MB
250mA maximum output current
USB / battery switch
Q2
IRLML2502
Q3
IRLML6402
BT1
BU-2032SM-JJ-G
CR2032, 3V @ 225mAh
Row 1
Branch 1
Row 2
Branch 2
Row 3
Branch 3
Row 4
Branch 4

USB INTERFACE

- allows for arduino programming and interactive mode
- FT231X USB-to-Serial UART
  - entire usb protocol handled on-chip
  - host will recognize as virtual serial device/com port
- mosfets for soft-start and power switcho

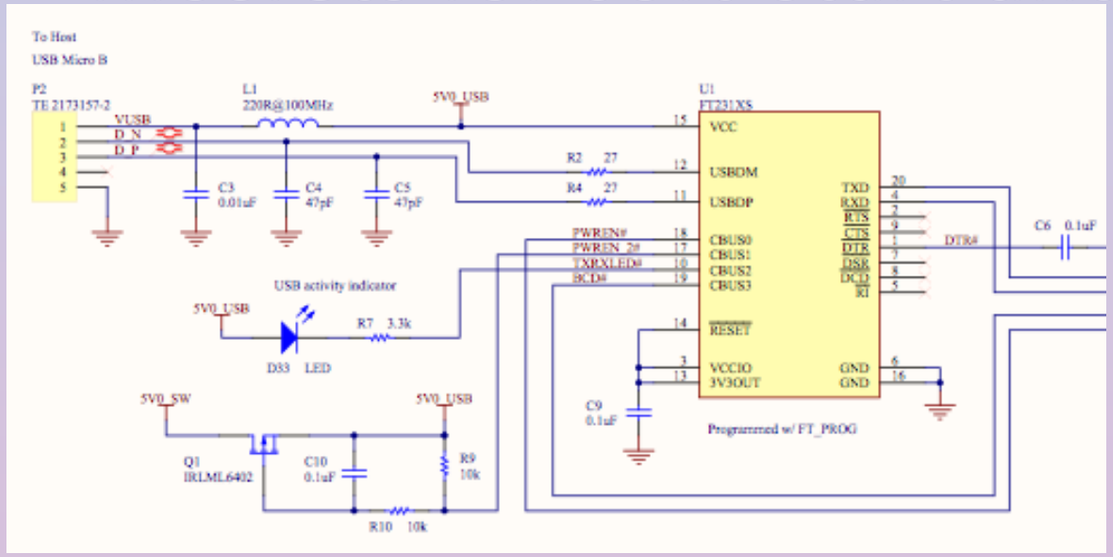

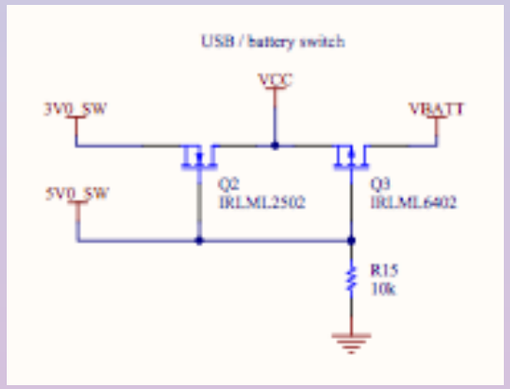

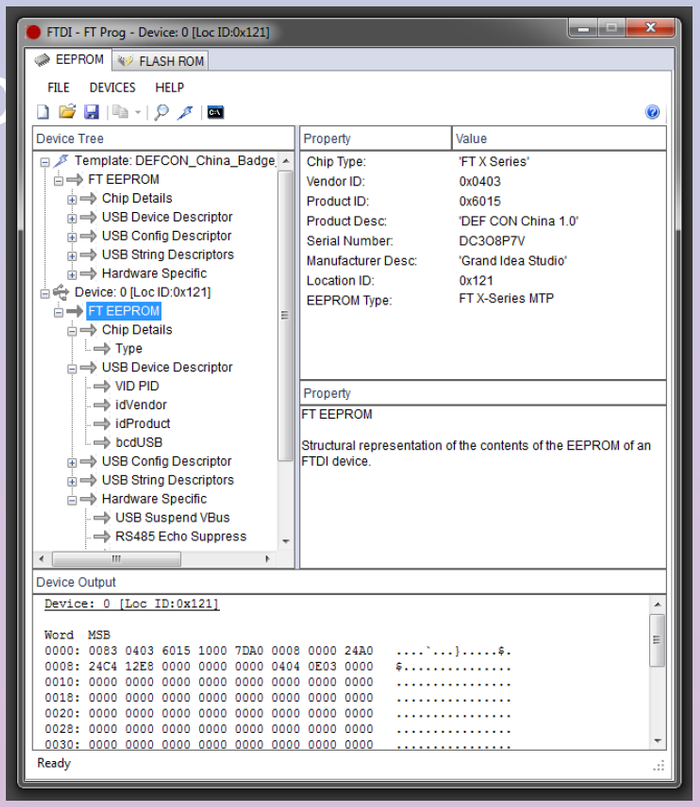

led matrix

- multiplexing via led matrix library
  - row controlled by discrete i/O
  - column controlled through 74hc595 shift register
  - refresh @ 175hz to reduce flicker
- each led individually addressable, dimmable (16 levels)

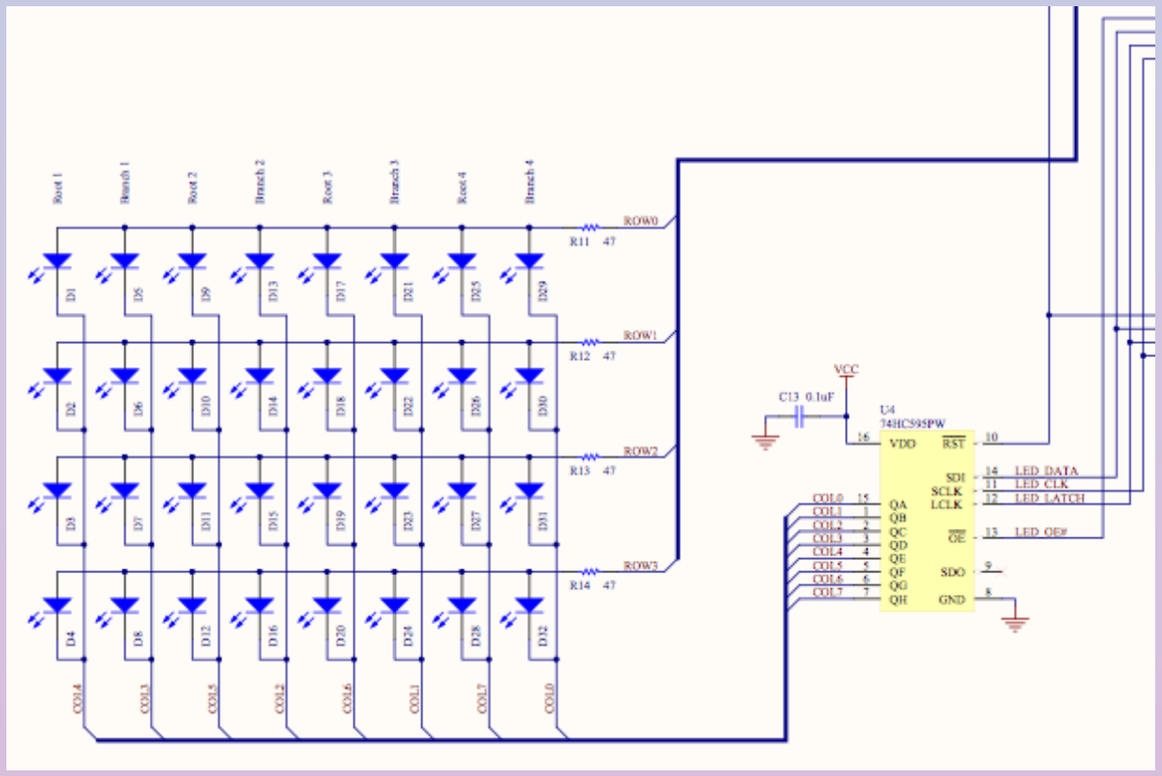

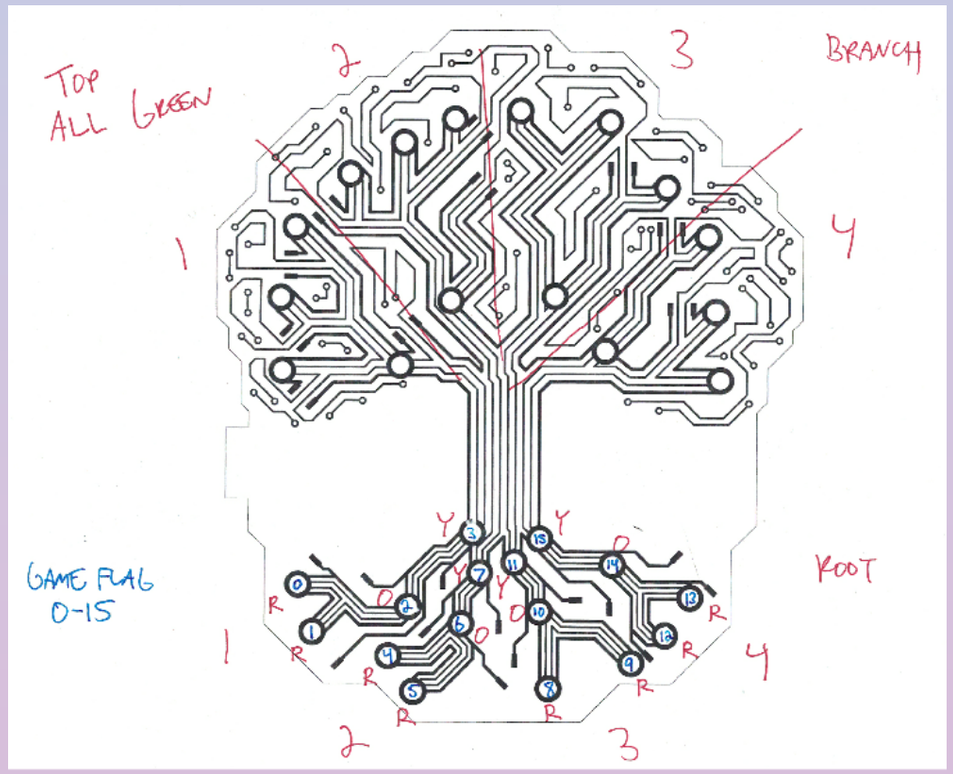

accelerometer

- ST microelectronics LIS3DH
  - 3-axis digital output (i2c/SPI)
  - +/- 2, 4, 8, 16g range
  - interrupt on motion or free fall
- used to preserve battery life
  - sleep mode @ 10 seconds of inactivity
- Raw values available through interactive mode

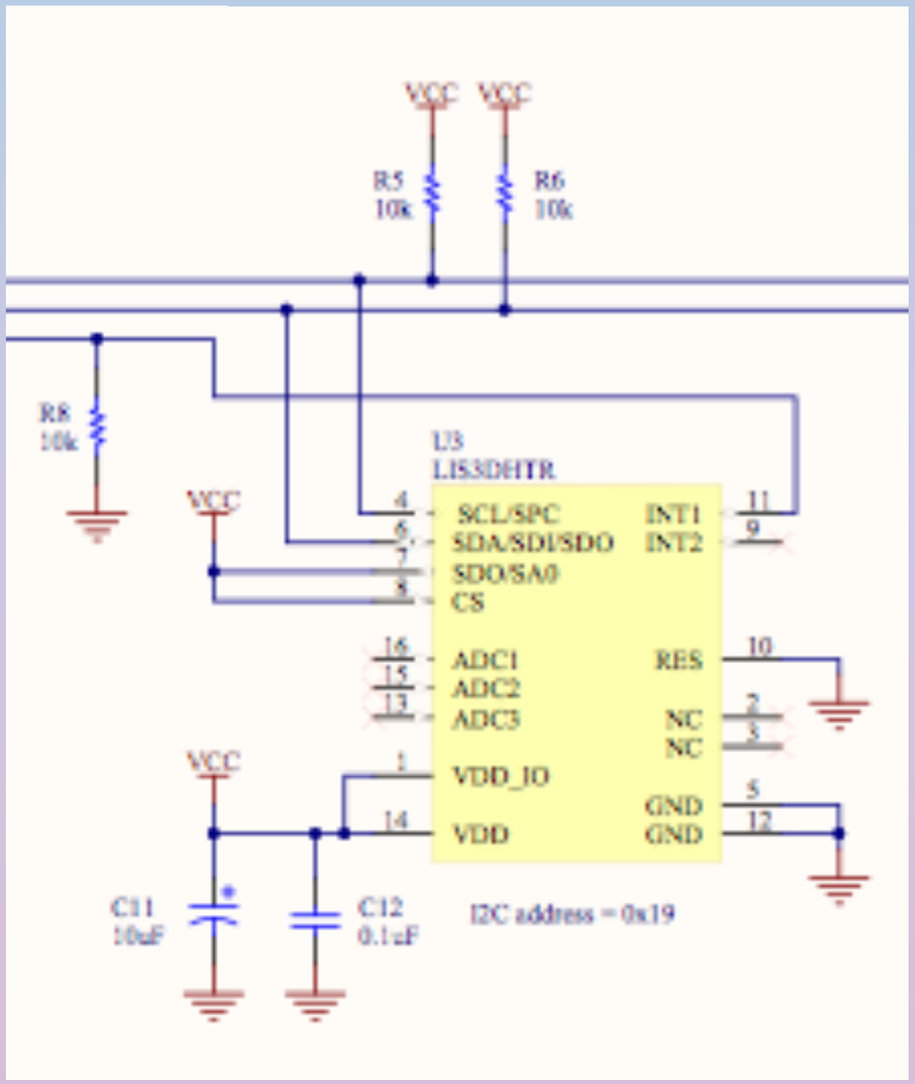

FLEXIBLE PRINTED CIRCUIT (FPC)

- edge connector as interface to the outside world
  - UART, I2C, AVR ICSP
- used with programming shield to set/read state of badge leds

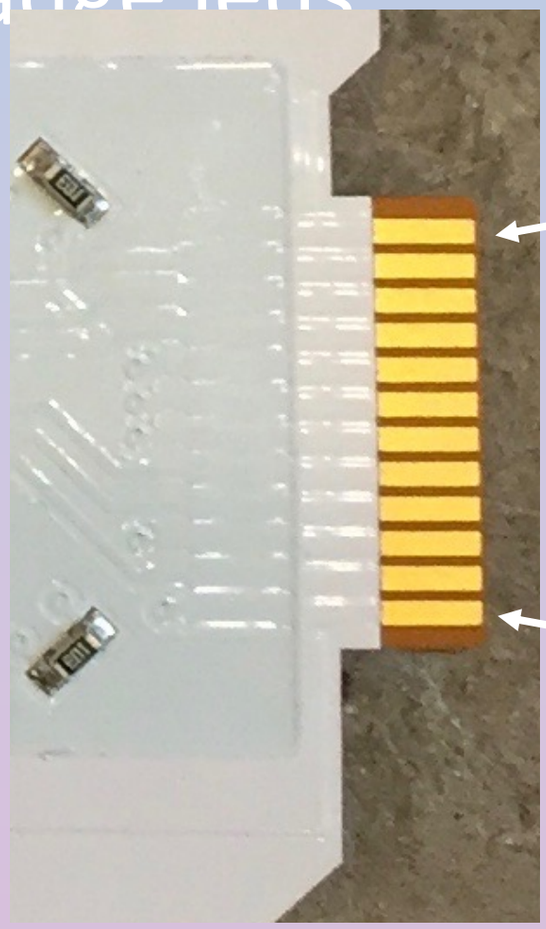

1. GND
2. SCK
3. MISO
4. MOSI
5. /RST
6. SDA
7. SCL
8. SIN
9. SOUT
10. /SENSE
11. GPIO
12. VCC

bill-of-materials

Item	Quantity	Reference	Manufacturer	Manuf. Part #	Distributor	Distrib. Part #	Description
1	1	BT1	MPD	BU2032SM-JJ-GTR	N/A	N/A	Battery Holder, CR2032, SMD
1b	1	N/A	Panasonic	CR2032	Digi-Key	P189-ND	Battery, Coin Cell, Lithium, 3V, 225mAh
2	9	C1, C2, C6, C7, C8, C9, C10, C12, C13	Kemet	C0603C104K4RACTU	Digi-Key	399-1096-2-ND	Capacitor, 0.1uF, 16V, Ceramic, 10%, X7R, 0603
3	1	C3	Samsung	CL10B103KB8NCNC	Digi-Key	1276-1921-2-ND	Capacitor, 0.01uF, 50V, Ceramic, 10%, X7R, 0603
4	2	C4, C5	AVX	06035A470JAT2A	Digi-Key	478-1171-2-ND	Capacitor, 47pF, 50V, Ceramic, 5%, C0G/NP0, 0603
5	1	C11	Kemet	T491A106M016AT	Digi-Key	399-3687-2-ND	Capacitor, 10uF, 16V, Tantalum, 20%, Size A
6	2	C14, C15	Taiyo Yuden	TMK212B7225KG-TR	Digi-Key	587-2991-2-ND	Capacitor, 2.2uF, 25V, Ceramic, 10%, X7R, 0805
7	4	D1, D9, D17, D25	Kingbright	AA3528SYCKT09	N/A	N/A	LED, Yellow, 250mcd, 2.0Vf, 590nm, Reverse Mount, PLCC-2
8	4	D2, D10, D18, D26	Kingbright	AA3528SECKT09	N/A	N/A	LED, Orange, 350mcd, 2.1Vf, 605nm, Reverse Mount, PLCC-2
9	8	D3, D4, D11, D12, D19, D20, D27, D28	Kingbright	AA3528SURCKT09	N/A	N/A	LED, Red, 350mcd, 1.95Vf, 630nm, Reverse Mount, PLCC-2
10	16	D5, D6, D7, D8, D13, D14, D15, D16, D21, D22, D23, D24, D29, D30, D31, D32	Kingbright	AA3528CGCKT09	N/A	N/A	LED, Green, 100mcd, 2.1Vf, 570nm, Reverse Mount, PLCC-2
11	1	D33	Kingbright	APT1608LQWF/D	N/A	N/A	LED, White, 35mcd, 2.65Vf, 0603
12	1	L1	TDK	MPZ2012S221AT000	Digi-Key	445-1568-2-ND	Inductor, Ferrite Bead, 220R @ 100MHz, 3A, 0805
13	1	L2	Taiyo Yuden	LBMF1608T100K	Digi-Key	587-1714-2-ND	Inductor, Wirewound, 10uH, 10%, 360mR, 80mA, 0603
14	1	P2	TE Connectivity	2173157-2	Verical	N/A	Connector, Micro-USB Type B, R/A, 5 position, SMD
15	2	Q1, Q3	Infineon	IRLML6402TRPBF	Digi-Key	IRLML6402PBFTR-ND	Transistor, MOSFET, P-Channel, 20V, 65mR @ 3.7A, SOT23
16	1	Q2	Infineon	IRLML2502TRPBF	Digi-Key	IRLML2502TRPBFTR-ND	Transistor, MOSFET, N-Channel, 20V, 45mR @ 4.2A, SOT23
17	8	R1, R3, R5, R6, R8, R9, R10, R15	Panasonic	ERJ-3GEYJ103V	Digi-Key	P10KGTR-ND	Resistor, 10k, 5%, 1/10W, 0603
18	2	R2, R4	Panasonic	ERJ-3GEYJ270V	Digi-Key	P27GTR-ND	Resistor, 27 ohm, 5%, 1/10W, 0603
19	1	R7	Panasonic	ERJ-3GEYJ332V	Digi-Key	P3.3KGTR-ND	Resistor, 3.3k, 5%, 1/10W, 0603
20	4	R11, R12, R13, R14	Panasonic	ERJ-3GEYJ470V	Digi-Key	P47GTR-ND	Resistor, 47 ohm, 5%, 1/10W, 0603
21	1	SW1	Panasonic	EVP-AA202K	Digi-Key	P13348SDKR-ND	Switch, SPST, Tactile Momentary, 160gf, 3.5 x 2.9mm, J-Lead
22	1	U1	FTDI	FT231XS-R	Digi-Key	768-1129-2-ND	IC, USB-to-UART Bridge, SSOP20
23	1	U2	Microchip	ATMEGA328P-AU	N/A	N/A	IC, Microcontroller, 32KB Flash, TQFP32
23b	1	N/A	Microchip	N/A	N/A	N/A	IC, Microcontroller, Programming
24	1	U3	STMicroelectronics	LIS3DHTR	Digi-Key	497-10613-6-ND	IC, Accelerometer, 3-Axis, 2-16g, LGA16
25	1	U4	Nexperia	74HC595PW,118	Digi-Key	1727-3068-2-ND	IC, Shift Register, 8-bit, TSSOP16
26	1	U5	Microchip	MCP1700T-3002E/MB	Digi-Key	MCP1700T-3002E/MBCT-ND	Voltage Regulator, LDO, 3.0V, 250mA, SOT89-3
27	1	Y1	Kyocera	PBRC8.00MR50X000	Mouser	581-PBRC8.00MR50X	Resonator, 8MHz, 0.5%, Internal 15pF Capacitor, SMD
28	1	PCB	Electronic Interconnect	DCN1.0	N/A	N/A	PCB Fabrication, Assembly, Test

Firmware

- ARDUINO
  - open source platform based on easy-to-use hw/sw/FW
  - worldwide community of users/contributors
- 90% of FLash (27.6kB), 43% of RAM (887 bytes)
- loop
  - set power state (battery, usb, usb charger)
  - check for/process interactive mode
  - check for/process fpc communication
  - update leds
  - sleep until accelerometer interrupt

arduino cheat sheet

Structure & Flow

Basic Program Structure
```
void setup() {
  // Runs once when sketch starts
}
void loop() {
  // Runs repeatedly
}
```

Control Structures
```
if (x < 5) { ... } else { ... }
while (x < 5) { ... }
for (int i = 0; i < 10; i++) { ... }
break;     // Exit a loop immediately
continue;  // Go to next iteration
switch (var) {
  case 1:
    ...
    break;
  case 2:
    ...
    break;
  default:
    ...
}
return x;  // x must match return type
return;    // For void return type
```

Function Definitions
```
<ret. type> <name>(<params>) { ... }
e.g. int double(int x) {return x*2;}
```

Operators

General Operators

=	assignment		
+	add	-	subtract
*	multiply	/	divide
%	modulo		
==	equal to	!=	not equal to
<	less than	>	greater than
<=	less than or equal to		
>=	greater than or equal to		
&&	and	||	or
!	not		

Compound Operators

++	increment
--	decrement
+=	compound addition
-=	compound subtraction
*=	compound multiplication
/=	compound division
&=	compound bitwise and
|=	compound bitwise or

Bitwise Operators

&	bitwise and	|	bitwise or
^	bitwise xor	~	bitwise not
<<	shift left	>>	shift right

Pointer Access

&	reference: get a pointer
*	dereference: follow a pointer

Built-in Functions

Pin Input/Output
```
Digital I/O - pins 0-13 A0-A5
  pinMode(pin,
    [INPUT, OUTPUT, INPUT_PULLUP])
  int digitalRead(pin)
  digitalWrite(pin, [HIGH, LOW])

Analog In - pins A0-A5
  int analogRead(pin)
  analogReference(
    [DEFAULT, INTERNAL, EXTERNAL])

PWM Out - pins 3 5 6 9 10 11
  analogWrite(pin, value)
```

Advanced I/O
```
tone(pin, freq_Hz)
tone(pin, freq_Hz, duration_ms)
noTone(pin)
shiftOut(dataPin, clockPin,
  [MSBFIRST, LSBFIRST], value)
unsigned long pulseIn(pin,
  [HIGH, LOW])
```

Time
```
unsigned long millis()
  // Overflows at 50 days
unsigned long micros()
  // Overflows at 70 minutes
delay(msec)
delayMicroseconds(usec)
```

Math
```
min(x, y)   max(x, y)   abs(x)
sin(rad)    cos(rad)    tan(rad)
sqrt(x)     pow(base, exponent)
constrain(x, minval, maxval)
map(val, fromL, fromH, toL, toH)
```

Random Numbers
```
randomSeed(seed) // long or int
long random(max) // 0 to max-1
long random(min, max)
```

Bits and Bytes
```
lowByte(x)    highByte(x)
bitRead(x, bitn)
bitWrite(x, bitn, bit)
bitSet(x, bitn)
bitClear(x, bitn)
bit(bitn)  // bitn: 0=LSB 7=MSB
```

Type Conversions
```
char(val)       byte(val)
int(val)        word(val)
long(val)       float(val)
```

External Interrupts
```
attachInterrupt(interrupt, func,
 [LOW, CHANGE, RISING, FALLING])
detachInterrupt(interrupt)
interrupts()
noInterrupts()
```

Libraries

Serial - comm. with PC or via RX/TX
```
begin(long speed)  // Up to 115200
end()
int available()  // #bytes available
int read()   // -1 if none available
int peek()   // Read w/o removing
flush()
print(data)    println(data)
write(byte)    write(char * string)
write(byte * data, size)
SerialEvent()  // Called if data rdy
```

SoftwareSerial.h - comm. on any pin
```
SoftwareSerial(rxPin, txPin)
begin(long speed)  // Up to 115200
listen()       // Only 1 can listen
isListening()  // at a time.
read, peek, print, println, write
  // Equivalent to Serial library
```

EEPROM.h - access non-volatile memory
```
byte read(addr)
write(addr, byte)
EEPROM[index]  // Access as array
```

Servo.h - control servo motors
```
attach(pin, [min_uS, max_uS])
write(angle)  // 0 to 180
writeMicroseconds(uS)
   // 1000-2000; 1500 is midpoint
int read()    // 0 to 180
bool attached()
detach()
```

Wire.h - I²C communication
```
begin()     // Join a master
begin(addr) // Join a slave @ addr
requestFrom(address, count)
beginTransmission(addr) // Step 1
send(byte)              // Step 2
send(char * string)
send(byte * data, size)
endTransmission()       // Step 3
int available() // #bytes available
byte receive()  // Get next byte
onReceive(handler)
onRequest(handler)
```

Variables, Arrays, and Data

Data Types

boolean	true | false
char	-128 - 127, 'a' '$' etc.
unsigned char	0 - 255
byte	0 - 255
int	-32768 - 32767
unsigned int	0 - 65535
word	0 - 65535
long	-2147483648 - 2147483647
unsigned long	0 - 4294967295
float	-3.4028e+38 - 3.4028e+38
double	currently same as float
void	i.e., no return value

Strings
```
char str1[8] =
  {'A','r','d','u','i','n','o','\0'};
  // Includes \0 null termination
char str2[8] =
  {'A','r','d','u','i','n','o'};
  // Compiler adds null termination
char str3[] = "Arduino";
char str4[8] = "Arduino";
```

Numeric Constants

123	decimal
0b01111011	binary
0173	octal - base 8
0x7B	hexadecimal - base 16
123U	force unsigned
123L	force long
123UL	force unsigned long
123.0	force floating point
1.23e6	1.23*10^6 = 1230000

Qualifiers

static	persists between calls
volatile	in RAM (nice for ISR)
const	read-only
PROGMEM	in flash

Arrays
```
int myPins[] = {2, 4, 8, 3, 6};
int myInts[6];   // Array of 6 ints
myInts[0] = 42;  // Assigning first
                 // index of myInts
myInts[6] = 12;  // ERROR! Indexes
                 // are 0 though 5
```

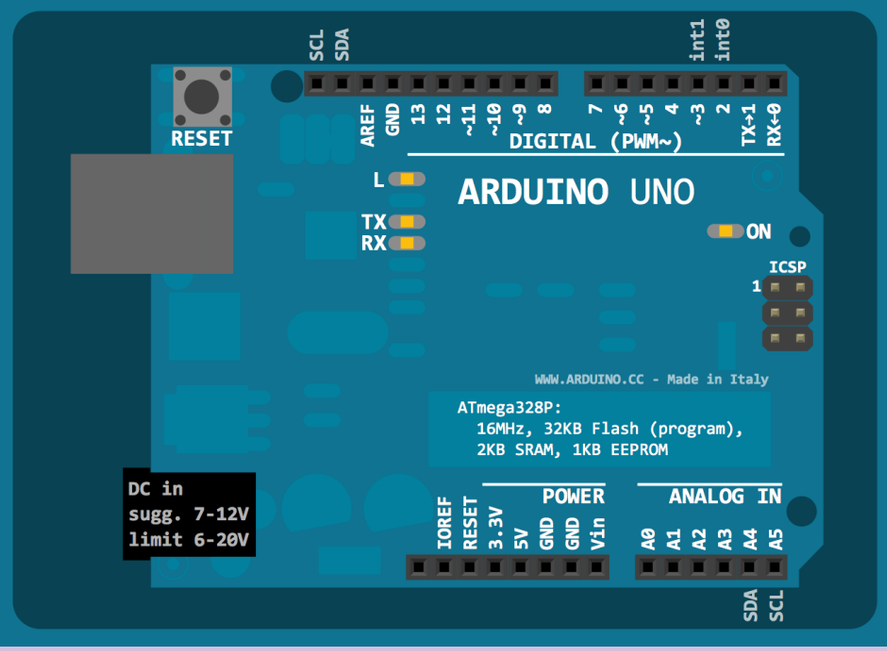

CC BY SA

by Mark Liffiton

version: 2018-08-06

source: https://github.com/liffiton/Arduino-Cheat-Sheet/

Adapted from:
- Original: Gavin Smith
- SVG version: Frederic Dufourg
- Arduino board drawing: Fritzing.org

setup development environment

- arduino ide
  - cross platform (windows, mac os, linux)
  - written in java, based on processing
  - www.arduino.cc/en/Main/Software



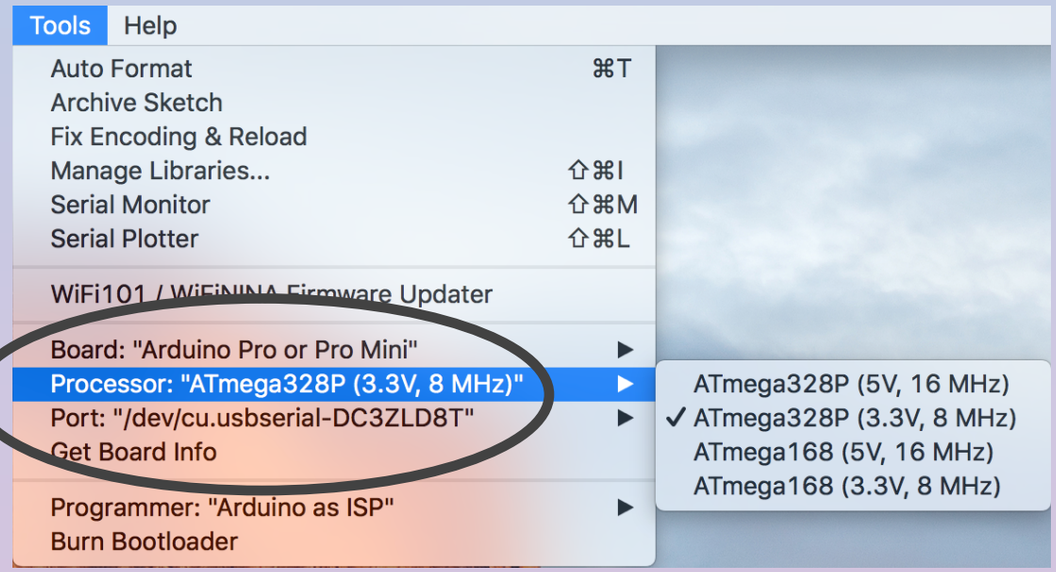

INTERACT w/ BADGE via SERIAL MONITOR

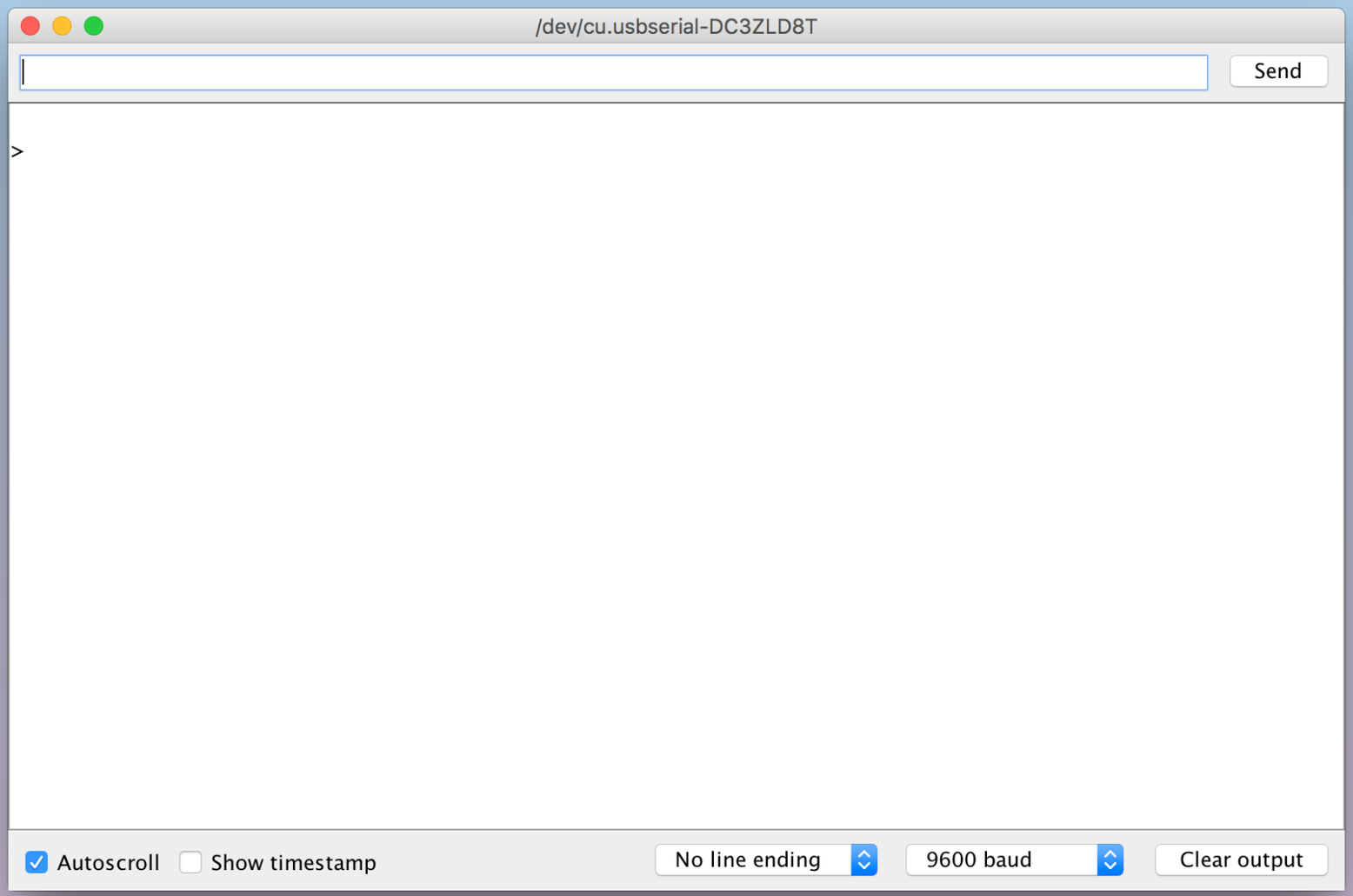

LIBRARIES

- Third-party libraries to add functionality to arduino
  - essential for rapid development
  - some code modifications required during badge integration
- Low power
  - https://github.com/rocketscream/Low-Power
- Adafruit_LIS3DH (ACCELEROMETER)
  - https://github.com/adafruit/Adafruit_LIS3DH
- Adafruit_SENSOR (sensor abstraction layer)
  - https://github.com/adafruit/Adafruit_Sensor

LIBRARIES

- led matrix (individually addressable, dimmable, shift register)
  - https://github.com/marcmerlin/LED-Matrix
- ADAFRUIT-GFX-LIBRARY (Core graphics primitives)
  - https://github.com/adafruit/Adafruit-GFX-Library
- DIO2 (Fast digital i/O)
  - www.codeproject.com/Articles/732646/Fast-digital-I-O-for-Arduino
- Timerone (ENHANCED TIMer, PERIODIC INTERRUPTS)
  - https://github.com/PaulStoffregen/TimerOne

install libraries

code modifications

- led matrix
  - Add #define swap() to .cpp to prevent compiling error
  - Remove #defines for DIO2 pinMode and digitalWrite
- conflicted with my core code

explore source code

- Find flags and figure out how to achieve them
  - enable special badge hacking workshop flag
  - ???

COMPILE & UPLOAD CODE

fpc breakout board

- access all fpc signals
  - UART, I2C, AVR ICSP
- sao adapter
- http://oshpark.com/shared_projects/X4QDh3nj

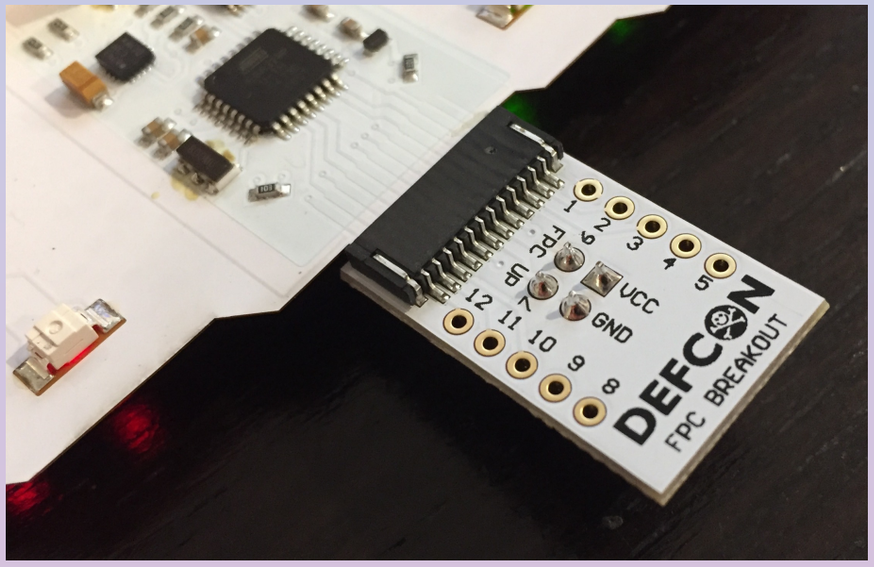

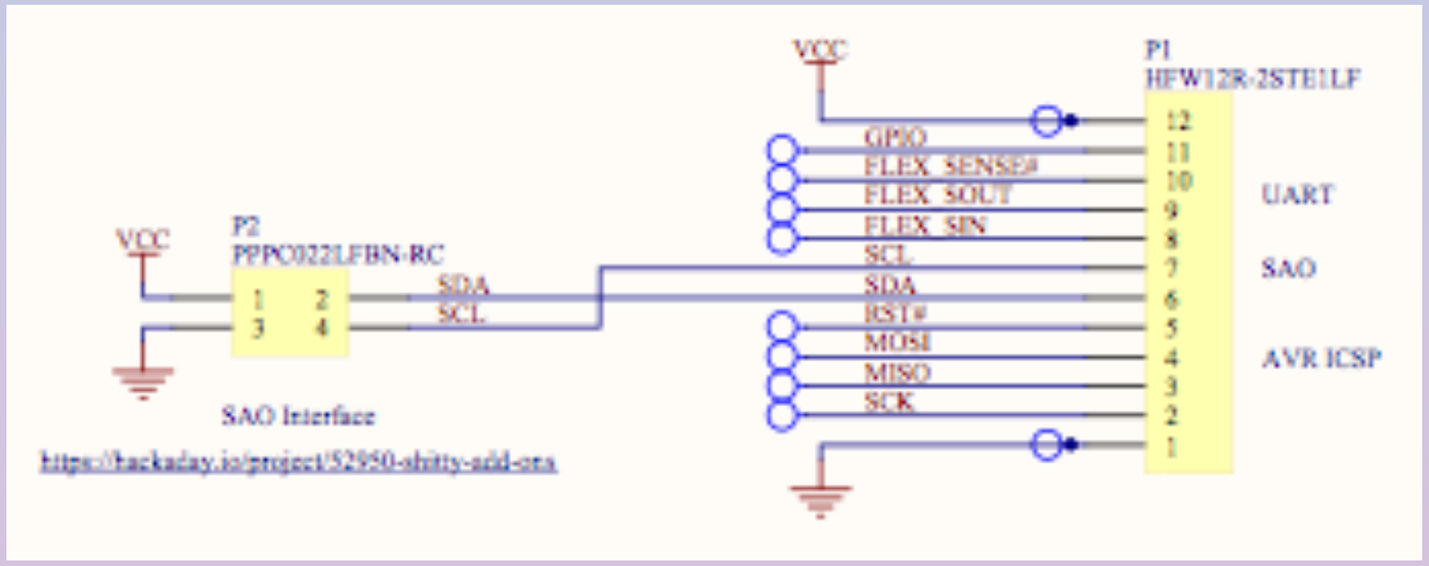

programming shield

- serial communication via fp
- set/clear individual led
- read state of badge
- arduino w/ custom shield
  - txs0104 level translator
    - 5v arduino <-> 3v badge
  - dip switches
  - i2c, avr icsp footprints

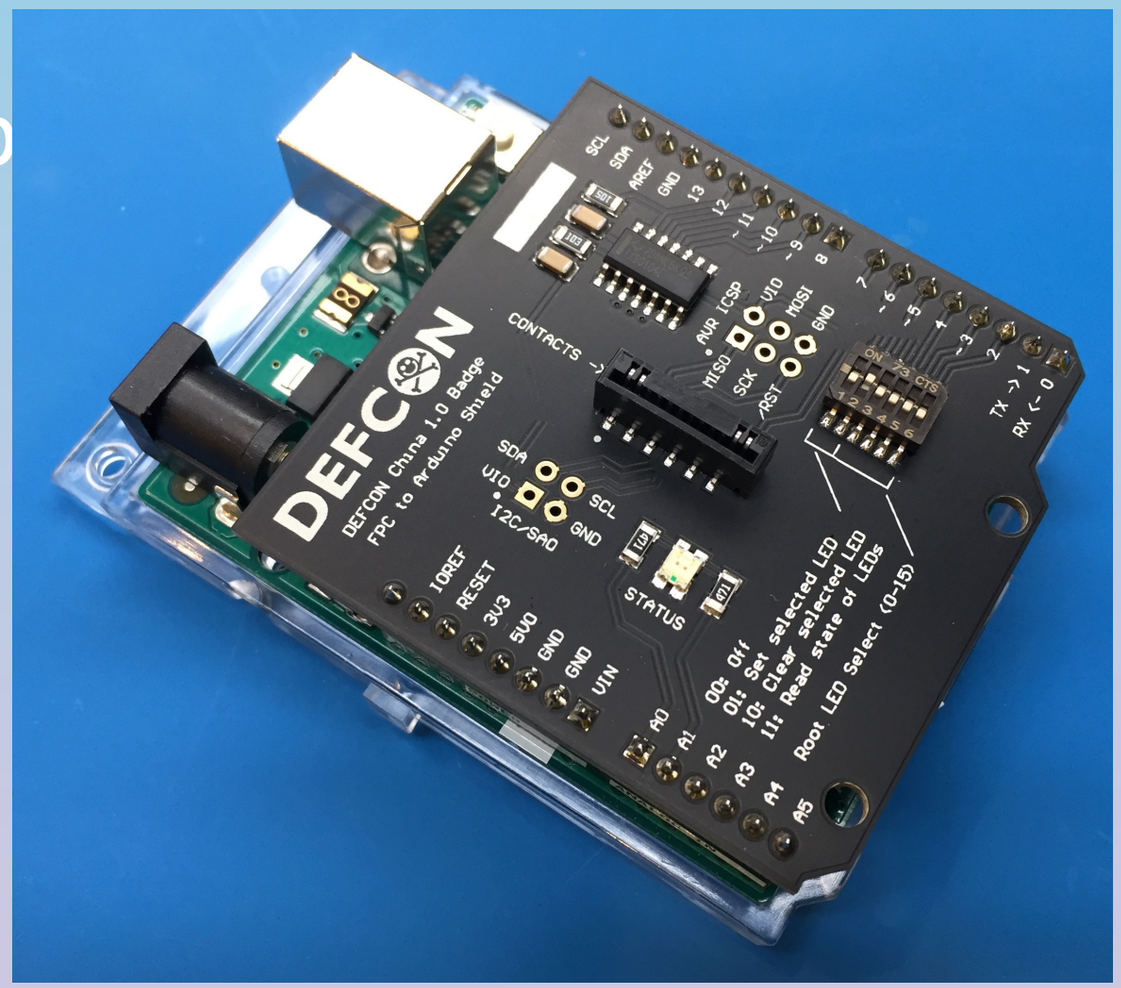

- http://oshpark.com/shared_projects/WGHZCahO

programming shield

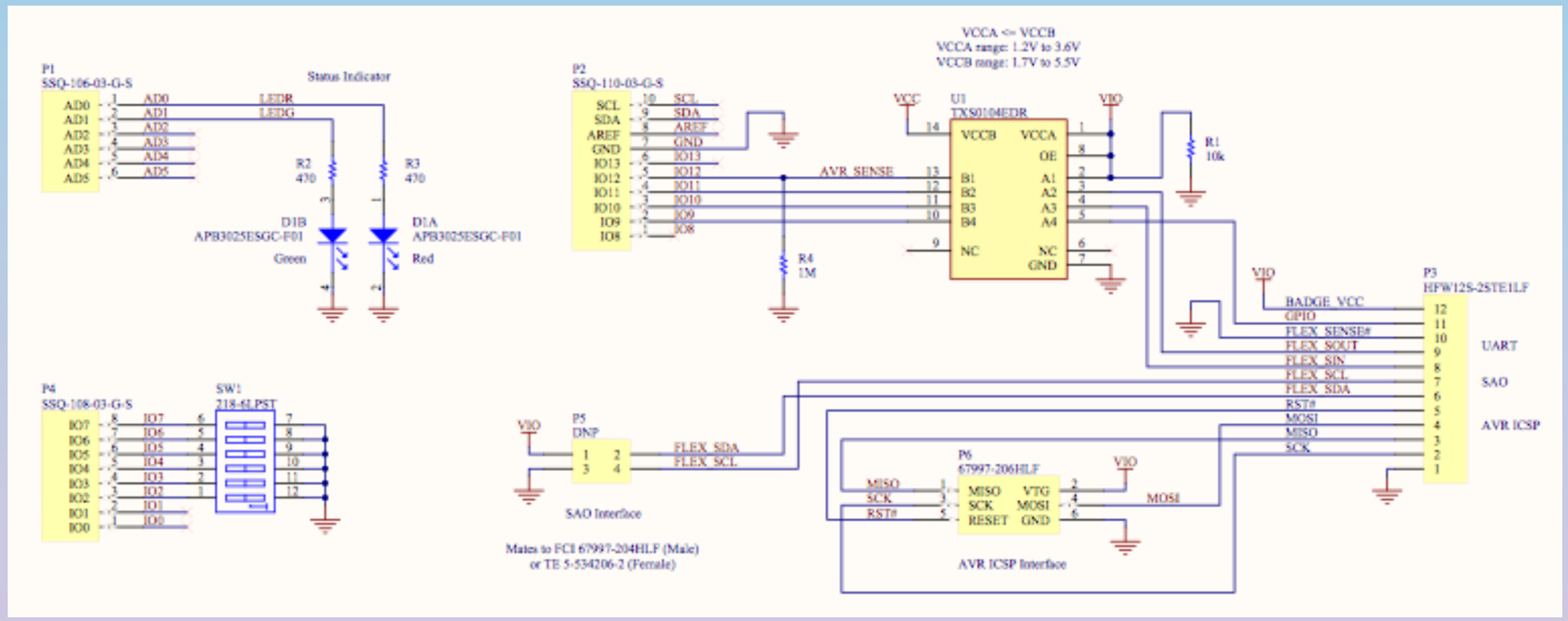

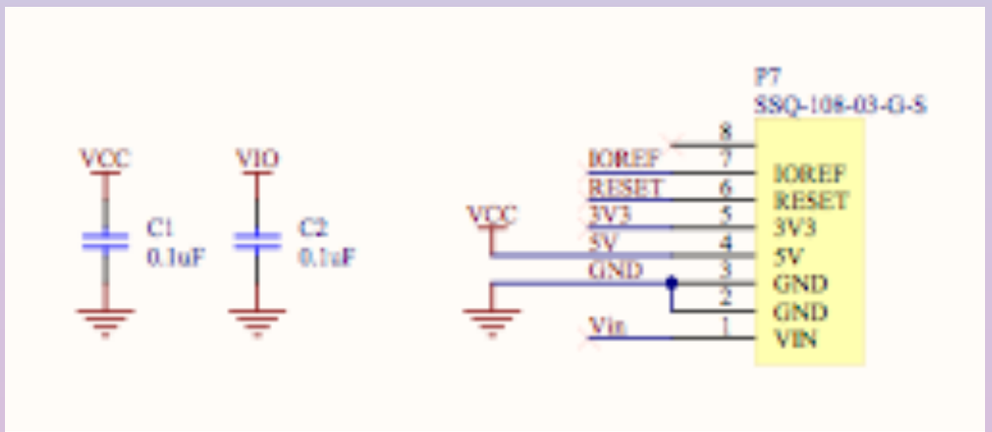

programming shield

- dip switch settings determine functionality
  - 00: Off
  - 01: set selected led
  - 10: clear selected led
  - 11: read badge state

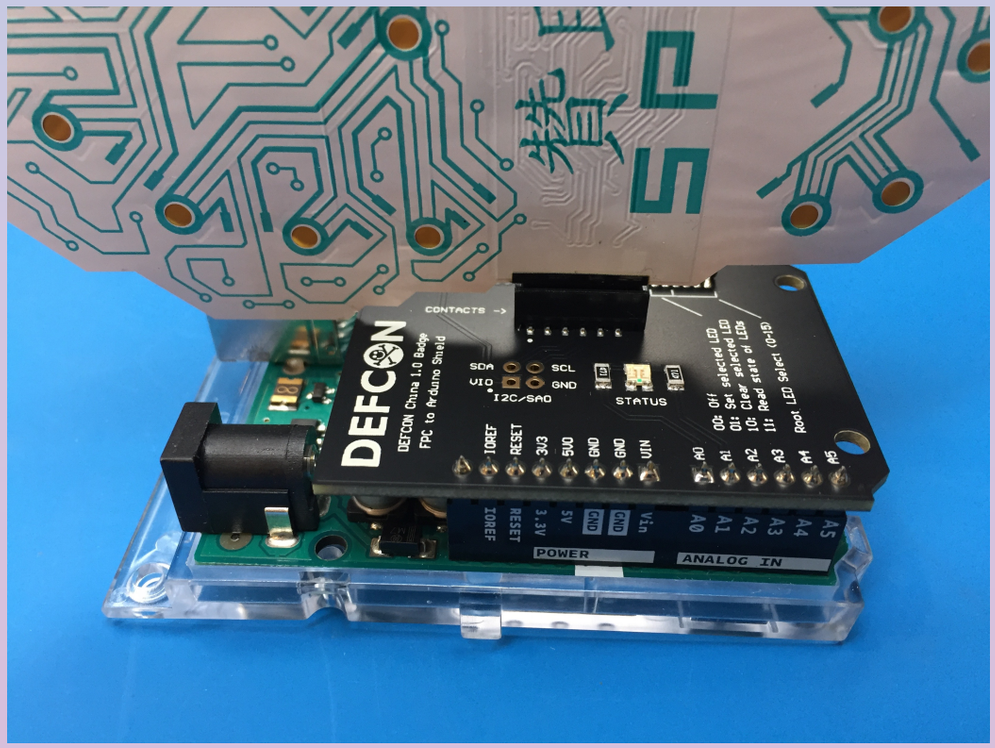

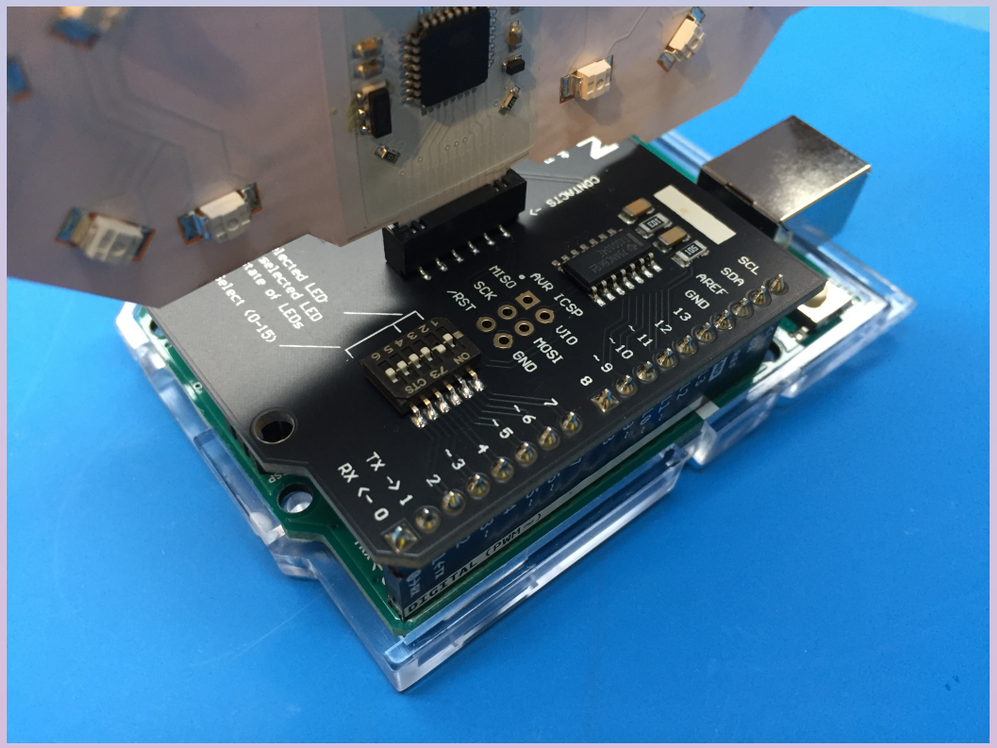

Hacking

- flexible, General purpose arduino platform
  - isolate core hardware from roots/branches (TREE TRIMMING)?
  - modify FW for better led animations?
  - more interaction w/ accelerometer?
  - ???
- design documentation, code, etc.
  - www.grandideastudio.com/portfolio/defcon-china-2019-badge

open lab



thank you for coming!

@JOEGRAND |
www.grandideastudio.com